YANMAR

SERVICE MANUAL

INDUSTRIAL ENGINES

3TNV82A
3TNV82A-B
3TNV84
3TNV84T
3TNV84T-B
3TNV88
3TNV88-B
3TNV88-U

4TNV84
4TNV84T
4TNV84T-Z
4TNV88
4TNV88-B
4TNV88-U
4TNV94L
4TNV98
4TNV98-Z
4TNV98-E
4TNV98T
4TNV98T-Z
4TNV106
4TNV106T

California Proposition 65 Warning

Diesel engine exhaust and some of its constituents are known to the state of California to cause cancer, birth defects, and other reproductive harm.

California Proposition 65 Warning

Battery posts, terminals, and related accessories contain lead and lead compounds, chemicals known to the state of California to cause cancer and reproductive harm.
Wash hands after handling.

TNV series

SERVICE MANUAL

3TNV82A(-B) • 3TNV84 • 3TNV84T(-B) •
3TNV88(-B)(-U)
4TNV84 • 4TNV84T(-Z) •
4TNV88(-B)(-U)
4TNV94L
4TNV98(-Z)(-E) • 4TNV98T(-Z)
4TNV106 • 4TNV106T

P/N: 0BTNV-G00102

YANMAR®

INDUSTRIAL ENGINES

This *Service Manual* has been developed for the exclusive use of service and repair professionals such as Yanmar authorized Distributors and Yanmar authorized Dealers. It is written with these professionals in mind and may not contain the necessary detail or safety statements that may be required for a non-professional to perform the service or repair properly and / or safely. Please contact an authorized Yanmar repair or service professional before working on your Yanmar product.

Disclaimers:

All information, illustrations and specifications in this manual are based on the latest information available at the time of publishing. The illustrations used in this manual are intended as representative reference views only. Moreover, because of our continuous product improvement policy, we may modify information, illustrations, and / or specifications to explain and / or exemplify a product, service, or maintenance improvement. We reserve the right to make any change at any time.

Yanmar and YANMAR. are registered trademarks of Yanmar Co., Ltd. in Japan, the United States and / or other countries.

All Rights Reserved:

No part of this publication may be reproduced or used in any form by any means - graphic, electronic, or mechanical, including photocopying, recording, taping, or information storage and retrieval systems - without the written permission of Yanmar Co., Ltd.

© 2005 Yanmar Co. Ltd.

Section 1

TABLE OF CONTENTS

	Page
Table of Contents	iii
Introduction	1-1
Yanmar Warranties	2-1
Safety	3-1
General Service Information	4-1
Periodic Maintenance	5-1
Engine	6-1
Fuel System	7-1
Cooling System	8-1
Lubrication System	9-1
Turbocharger	10-1
Starter Motor	11-1
Alternator	12-1
ELECTRONIC CONTROL SYSTEM	13-1
Electric Wiring	14-1

This Page Intentionally Left Blank

Section 1

INTRODUCTION

This *Service Manual* describes the service procedures for the TNV series direct injection engines. These engines are certified by the U.S. EPA, California ARB and/or the 97/68/EC Directive for industrial use.

Please use this manual for accurate, quick and safe servicing of the engine. Since the directions in this manual are for a typical engine, some specifications and components may be different from your engine. Refer to the documentation supplied by the optional equipment manufacturer for specific service instructions.

Yanmar products are continuously undergoing improvement. This *Service Manual* might not address possible field modifications to the equipment. Contact an authorized Yanmar industrial engine dealer or distributor for answers to any questions relating to field modifications.

This Page Intentionally Left Blank

Section 2

YANMAR WARRANTIES

Page

Yanmar Limited Warranty 2-3
- What is Covered by this Warranty? 2-3
- How Long is the Warranty Period? 2-3
- What the Engine Owner Must Do: 2-3
- To Locate an Authorized Yanmar Industrial Engine Dealer or Distributor: 2-4
- What Yanmar Will Do: 2-4
- What is Not Covered by this Warranty? 2-4
- Warranty Limitations: 2-5
- Warranty Modifications: 2-5
- Questions: 2-5
- Retail Purchaser Registration 2-5

Emission System Warranty 2-6

Yanmar Co., Ltd. Limited Emission Control System Warranty - USA Only 2-6
- Your Warranty Rights and Obligations: 2-6
- Manufacturer's Warranty Period: 2-6
- Warranty Coverage: 2-7
- Warranted Parts: 2-7
- Exclusions: 2-8
- Owner's Warranty Responsibilities: 2-8

This Page Intentionally Left Blank

YANMAR LIMITED WARRANTY

What is Covered by this Warranty?

Yanmar warrants to the original retail purchaser that a new Yanmar TNV Series Industrial Engine will be free from defects in material and / or workmanship for the duration of the warranty period.

Note: Yanmar engines may be equipped with external components including, but not limited to: wiring harnesses, electrical devices, control panels, radiators, air filters, fuel filters, and/or exhaust systems that are supplied and/or installed by manufacturers other than Yanmar. For warranty information on such external components, please contact the machine or component manufacturer directly or see your authorized Yanmar dealer or distributor.

THIS WARRANTY IS PROVIDED IN LIEU OF ALL OTHER WARRANTIES, EXPRESS OR IMPLIED. YANMAR SPECIFICALLY DISCLAIMS ANY IMPLIED WARRANTIES OF MERCHANTABILITY OR FITNESS FOR A PARTICULAR PURPOSE, except where such disclaimer is prohibited by law. IF SUCH DISCLAIMER IS PROHIBITED BY LAW, THEN IMPLIED WARRANTIES SHALL BE LIMITED IN DURATION TO THE LIFE OF THE EXPRESS WARRANTY.

How Long is the Warranty Period?

The Yanmar standard limited warranty period runs for a period of **twenty-four (24) months or two-thousand (2000) engine operation hours**, whichever occurs first. An extended limited warranty of thirty-six (36) months or three thousand (3000) engine operating hours, whichever occurs first, is provided for these specific parts only: the cylinder block, cylinder head, crankshaft forging, connecting rods, flywheel, flywheel housing, camshaft, timing gear, and gear case. The Warranty Period for both the standard limited warranty and the extended limited warranty (by duration or operation hours) begins on the date of delivery to the original retail purchaser and is valid only until the applicable warranted duration has passed or the operation hours are exceeded, whichever comes first.

What the Engine Owner Must Do:

If you believe your Yanmar engine has experienced a failure due to a defect in material and / or workmanship, you must contact an authorized Yanmar industrial engine dealer or distributor within thirty (30) days of discovering the failure. You must provide proof of ownership of the engine, proof of the date of the engine purchase and delivery, and documentation of the engine operation hours. Acceptable forms of proof of delivery date include, but are not limited to: the original warranty registration or sales receipts or other documents maintained in the ordinary course of business by Yanmar dealers and / or distributors, indicating the date of delivery of the Yanmar product to the original retail purchaser. This information is necessary to establish whether the Yanmar product is still within the warranty period. Thus, Yanmar strongly recommends you register your engine as soon as possible after purchase in order to facilitate any future warranty matters.

You are responsible for the transportation of the engine to and from the repair location as designated by Yanmar.

Yanmar Limited Warranty - Continued

To Locate an Authorized Yanmar Industrial Engine Dealer or Distributor:

You can locate your nearest authorized Yanmar industrial engine dealer or distributor by visiting the Yanmar Corp., LTD. website at:

http://www.yanmar.co.jp (The Japanese language page will be displayed.) For English language “click” on “English Page.”)

- “Click” on “Network” in the website heading to view the “Yanmar Worldwide Network.”
- Choose and “Click” on the desired product group.
- “Click” on the Icon closest to your region.
- “Click” on the desired country or Associate company to locate your nearest authorized Yanmar industrial engine dealer or distributor.
- You may also contact Yanmar by clicking on “Inquiry” in the website heading and typing in your question or comment.

What Yanmar Will Do:

Yanmar warrants to the original retail purchaser of a new Yanmar engine that Yanmar will make such repairs and / or replacements at Yanmar’s option, of any part(s) of the Yanmar product covered by this Warranty found to be defective in material and / or workmanship. Such repairs and / or replacements will be made at a location designated by Yanmar at no cost to the purchaser for parts or labor.

What is Not Covered by this Warranty?

This Warranty does not cover parts affected by or damaged by any reason other than defective materials or workmanship including, but not limited to, accident, misuse, abuse, “Acts of God,” neglect, improper installation, improper maintenance, improper storage, the use of unsuitable attachments or parts, the use of contaminated fuels, the use of fuels, oils, lubricants, or fluids other than those recommended in your Yanmar Operation Manual, unauthorized alterations or modifications, ordinary wear and tear, and rust or corrosion. This Warranty does not cover the cost of parts and / or labor required to perform normal / scheduled maintenance on your Yanmar engine. This Warranty does not cover consumable parts such as, but not limited to, filters, belts, hoses, fuel injector nozzles, lubricants and cleaning fluids. This Warranty does not cover the cost of shipping the product to or from the Warranty repair facility.

Yanmar Limited Warranty - Continued

Warranty Limitations:

The foregoing is Yanmar's only obligation to you and your exclusive remedy for breach of warranty. Failure to follow the requirements for submitting a claim under this Warranty may result in a waiver of all claims for damages and other relief. **In no event shall Yanmar or any authorized industrial engine dealer or distributor be liable for incidental, special or consequential damages.** Such consequential damages may include, but not be limited to, loss of revenue, loan payments, cost of rental of substitute equipment, insurance coverage, storage, lodging, transportation, fuel, mileage, and telephone costs. The limitations in this Warranty apply regardless of whether your claims are based on breach of contract, tort (including negligence and strict liability) or any other theory. Any action arising hereunder must be brought within one (1) year after the cause of action accrues or it shall be barred. Some states and countries do not allow certain limitations on warranties or for breach of warranties. **This Warranty gives you specific legal rights, and you may also have other rights which vary from state to state and country to country.** Limitations set forth in this paragraph shall not apply to the extent that they are prohibited by law.

Warranty Modifications:

Except as modified in writing and signed by the parties, this Warranty is and shall remain the complete and exclusive agreement between the parties with respect to warranties, superseding all prior agreements, written and oral, and all other communications between the parties relating to warranties. **No person or entity is authorized to give any other warranty or to assume any other obligation on behalf of Yanmar, either orally or in writing.**

Questions:

If you have any questions or concerns regarding this Warranty, please call or write to the nearest authorized Yanmar industrial engine dealer or distributor or other authorized facility.

Retail Purchaser Registration

It is very important for the original retail purchaser to register the Yanmar product. Registration enables Yanmar to provide the best support for your Yanmar product.

At the time of purchase, Yanmar highly recommends registering the retail purchaser's information through the website http://www.yanmar.co.jp as soon as possible.

If it is not possible to access the website, please contact the nearest authorized Yanmar industrial engine dealer or distributor.

EMISSION SYSTEM WARRANTY

YANMAR CO., LTD. LIMITED EMISSION CONTROL SYSTEM WARRANTY - USA ONLY

Your Warranty Rights and Obligations:

California

The California Air Resources Board (CARB), the Environmental Protection Agency (EPA) and Yanmar Co., Ltd. hereafter referred to as Yanmar, are pleased to explain the **emission control system warranty** on your industrial compression-ignition engine. In California, model year 2000 or later off-road compression-ignition engines must be designed, built and equipped to meet the State's stringent anti-smog standards. In all states, 1998 and later non-road compression-ignition engines must be designed, built and equipped to meet the United States EPA emissions standards. Yanmar warrants the emission control system on your engine for the periods of time listed below provided there has been no abuse, neglect or improper maintenance of your engine.

Your emission control system may include parts such as the fuel injection system, electronic control unit, exhaust gas recirculation (EGR) system and the air induction system. Also included may be hoses, belts, connectors and other emission-related assemblies.

Where a warrantable condition exists, Yanmar will repair your non-road compression-ignition engine at no charge to you including diagnosis, parts and labor.

Manufacturer's Warranty Period:

The model year 1998 or later certified and labeled non-road compression-ignition engines are warranted for the periods listed below. If any emission-related part on your engine is found to be defective during the applicable warranty period, the part will be replaced by Yanmar.

Engine Type	Warranty Period by Number of Years or Hours of Operation
Constant speed engines rated at or above 50 hp SAE (37 kW)	The warranty period is five (5) years or 3,000 hours of use, whichever occurs first. In the absence of a device to measure the hours of use, the engine has a warranty period of five (5) years.
Constant speed engines rated under 50 hp SAE (37 kW) with rated speeds greater than or equal to 3,000 rpm	The warranty period is two (2) years or 1,500 hours of use, whichever occurs first. In the absence of a device to measure the hours of use, the engine has a warranty period of two (2) years.
Constant speed engines rated under 50 hp SAE (37 kW) and engines rated at or above 26 hp SAE (19 kW) with rated speeds less than 3,000 rpm	The warranty period is five (5) years or 3,000 hours of use, whichever occurs first. In the absence of a device to measure the hours of use, the engine has a warranty period of five (5) years.
Engines rated at or above 26 hp SAE (19 kW)	The warranty period is five (5) years or 3,000 hours of use, whichever occurs first. In the absence of a device to measure the hours of use, the engine has a warranty period of five (5) years.
Engines rated under 26 hp SAE (19 kW)	The warranty period is two (2) years or 1,500 hours of use, whichever occurs first. In the absence of a device to measure the hours of use, the engine has a warranty period of two (2) years.

Limited Emission Control System Warranty - USA Only - Continued

Warranty Coverage:

This warranty is transferable to each subsequent purchaser for the duration of the warranty period. Repair or replacement of any warranted part will be performed at an authorized Yanmar industrial engine dealer or distributor.

Warranted parts not scheduled for replacement as required maintenance in the Operation Manual shall be warranted for the warranty period. Warranted parts scheduled for replacement as required maintenance in the operation manual are warranted for the period of time prior to the first scheduled replacement. Any part repaired or replaced under warranty shall be warranted for the remaining warranty period.

During the warranty period, Yanmar is liable for damages to other engine components caused by the failure of any warranted part during the warranty period.

Any replacement part which is functionally identical to the original equipment part in all respects may be used in the maintenance or repair of your engine, and shall not reduce Yanmar's warranty obligations. Add-on or modified parts that are not exempted may not be used. The use of any non-exempted add-on or modified parts shall be grounds for disallowing a warranty.

Warranted Parts:

This warranty covers engine components that are a part of the emission control system of the engine as delivered by Yanmar to the original retail purchaser. Such components may include the following:

- Fuel Injection System
- Electronic Control System
- Cold Start Enrichment System
- Intake Manifold
- Turbocharger Systems
- Exhaust Manifold
- EGR System
- Positive Crankcase Ventilation System
- Hoses, belts, connectors and assemblies associated with emission control systems

Since emissions-related parts may vary slightly between models, certain models may not contain all of these parts and other models may contain the functional equivalents.

Limited Emission Control System Warranty - USA Only - Continued

Exclusions:

Failures other than those arising from defects in material and / or workmanship are not covered by this warranty. The warranty does not extend to the following: malfunctions caused by abuse, misuse, improper adjustment, modification, alteration, tampering, disconnection, improper or inadequate maintenance or use of non-recommended fuels and lubricating oils; accident-caused damage, and replacement of expendable items made in connection with scheduled maintenance. Yanmar disclaims any responsibility for incidental or consequential damages such as loss of time, inconvenience, loss of use of equipment / engine or commercial loss.

Owner's Warranty Responsibilities:

As the engine owner, you are responsible for the performance of the required maintenance listed in your owner's manual. Yanmar recommends that you retain all documentation, including receipts, covering maintenance on your non-road compression-ignition engine, but Yanmar cannot deny warranty solely for the lack of receipts, or for your failure to ensure the performance of all scheduled maintenance.

Yanmar may deny your warranty coverage of your non-road compression-ignition engine if a part has failed due to abuse, neglect, improper maintenance or unapproved modifications.

Your engine is designed to operate on diesel fuel only. Use of any other fuel may result in your engine no longer operating in compliance with applicable emissions requirements.

You are responsible for initiating the warranty process. You must present your engine to a Yanmar dealer as soon as a problem exists. The warranty repairs should be completed by the dealer as expeditiously as possible. If you have any questions regarding your warranty rights and responsibilities, or would like information on the nearest Yanmar dealer or authorized service center, you should contact Yanmar America Corporation at 1-800-872-2867.

Section 3

SAFETY

Page

Safety Statements 3-3
Safety Precautions 3-4

This Page Intentionally Left Blank

SAFETY STATEMENTS

Yanmar is concerned for your safety and your machine's condition. Safety statements are one of the primary ways to call your attention to the potential hazards associated with Yanmar TNV engine operation. Follow the precautions listed throughout the manual before operation, during operation and during periodic maintenance procedures for your safety, the safety of others and to protect the performance of your engine. Keep the labels from becoming dirty or torn and replace them if they are lost or damaged. Also, if you need to replace a part that has a label attached to it, make sure you order the new part and label at the same time.

This safety alert symbol appears with most safety statements. It means attention, become alert, your safety is involved! Please read and abide by the message that follows the safety alert symbol.

⚠ DANGER

Danger (the word "DANGER" is in white letters with a red rectangle behind it) - indicates an imminently hazardous situation which, if not avoided, will result in death or serious injury. Danger is limited to the most extreme situations.

0000001en

⚠ WARNING

Warning (the word "WARNING" is in black letters with an orange rectangle behind it) – indicates a potentially hazardous situation which, if not avoided, could result in death or serious injury.

0000001en

⚠ CAUTION

Caution (the word "CAUTION" is in black letters with a yellow rectangle behind it) – indicates a potentially hazardous situation which, if not avoided, may result in minor or moderate injury.

0000001en

CAUTION

Caution without the safety alert symbol indicates a potentially hazardous situation that can cause damage to the machine, personal property and / or the environment or cause the machine to operate improperly.

0000001en

SAFETY PRECAUTIONS

⚠ DANGER

SCALD HAZARD!

- NEVER remove the radiator cap if the engine is hot. Steam and hot engine coolant will spurt out and seriously burn you. Allow the engine to cool down before you attempt to remove the radiator cap.
- Tighten the radiator cap securely after you check the radiator. Steam can spurt out during engine operation if the cap is loose.
- ALWAYS check the level of the engine coolant by observing the reserve tank.
- Failure to comply will result in death or serious injury.

0000002en

⚠ DANGER

EXPLOSION HAZARD!

- Keep the area around the battery well-ventilated. While the engine is running or the battery is charging, hydrogen gas is produced which can be easily ignited.
- Keep sparks, open flame and any other form of ignition away while the engine is running or battery is charging.
- Failure to comply will result in death or serious injury.

0000003en

⚠ DANGER

FIRE AND EXPLOSION HAZARD!

- Diesel fuel is flammable and explosive under certain conditions.
- When you remove any fuel system component to perform maintenance (such as changing the fuel filter) place an approved container under the opening to catch the fuel.
- NEVER use a shop rag to catch the fuel. Vapors from the rag are flammable and explosive.
- Wipe up any spills immediately.
- Wear eye protection. The fuel system is under pressure and fuel could spray out when you remove any fuel system component.
- Failure to comply will result in death or serious injury.

0000009en

⚠ DANGER

FIRE AND EXPLOSION HAZARD!

- Only use the key switch to start the engine.
- NEVER jump-start the engine. Sparks caused by shorting the battery to the starter terminals may cause a fire or explosion.
- Failure to comply will result in death or serious injury.

0000004en

⚠ DANGER

FIRE AND EXPLOSION HAZARD!

- Diesel fuel is flammable and explosive under certain conditions.
- If the unit has an electric fuel pump, when you prime the fuel system, turn the key switch to the ON position for 10 to 15 seconds to allow the electric fuel pump to prime the system.
- If the unit has a mechanical fuel pump, when you prime the fuel system, operate the fuel priming lever of the mechanical fuel pump several times until the fuel filter cup is filled with fuel.
- Failure to comply will result in death or serious injury.

0000010en

⚠ DANGER

FIRE AND EXPLOSION HAZARD!

- Diesel fuel is flammable and explosive under certain conditions.
- Only fill the fuel tank with diesel fuel. Filling the fuel tank with gasoline may result in a fire and will damage the engine.
- NEVER refuel with the engine running.
- Wipe up all spills immediately.
- Keep sparks, open flames or any other form of ignition (match, cigarette, static electric source) well away when refueling.
- NEVER overfill the fuel tank.
- Fill the fuel tank. Store any containers containing fuel in a well-ventilated area, away from any combustibles or sources of ignition.
- Failure to comply will result in death or serious injury.

0000005en

⚠ DANGER

FIRE AND EXPLOSION HAZARD!

- Diesel fuel is flammable and explosive under certain conditions.
- Be sure to place the diesel fuel container on the ground when transferring the diesel fuel from the pump to the container. Hold the hose nozzle firmly against the side of the container while filling it. This prevents static electricity buildup which could cause sparks and ignite fuel vapors.
- NEVER place diesel fuel or other flammable material such as oil, hay or dried grass close to the engine during engine operation or shortly after shutdown.
- Failure to comply will result in death or serious injury.

0000014en

⚠ DANGER

CRUSH HAZARD!

- When you need to transport an engine for repair, have a helper assist you to attach it to a hoist and load it on a truck.
- NEVER stand under a hoisted engine. If the hoist mechanism fails, the engine will fall on you, causing death or serious injury.
- Failure to comply will result in death or serious injury.

0000008en

⚠ DANGER

FIRE AND EXPLOSION HAZARD!

- Diesel fuel is flammable and explosive under certain conditions.
- Before you operate the engine, check for fuel leaks. Replace rubberized fuel hoses every two years or every 2000 hours of engine operation, whichever comes first, even if the engine has been out of service. Rubberized fuel lines tend to dry out and become brittle after two years or 2000 hours of engine operation, whichever comes first.
- Failure to comply will result in death or serious injury.

0000015en

⚠ DANGER

EXPLOSION HAZARD!

- NEVER check the remaining battery charge by shorting out the terminals. This will result in a spark and may cause an explosion or fire. Use a hydrometer to check the remaining battery charge.
- If the electrolyte is frozen, slowly warm the battery before you recharge it.
- Failure to comply will result in death or serious injury.

0000007en

⚠ DANGER

FIRE AND EXPLOSION HAZARD!

- Diesel fuel is flammable and explosive under certain conditions.
- NEVER remove the fuel cap with the engine running.
- Failure to comply will result in death or serious injury.

0000011en

⚠ DANGER

FIRE AND EXPLOSION HAZARD!

- Diesel fuel is flammable and explosive under certain conditions.
- NEVER use diesel fuel as a cleaning agent.
- Failure to comply will result in death or serious injury.

0000012en

⚠ WARNING

SEVER HAZARD!

- Keep hands and other body parts away from moving / rotating parts such as the cooling fan, flywheel or PTO shaft.
- Wear tight-fitting clothing and keep your hair short or tie it back while the engine is running.
- Remove all jewelry before you operate or service the machine.
- NEVER start the engine in gear. Sudden movement of the engine and / or machine could cause death or serious personal injury.
- NEVER operate the engine without the guards in place.
- Before you start the engine make sure that all bystanders are clear of the area.
- Keep children and pets away while the engine is operating.
- Check before starting the engine that any tools or shop rags used during maintenance have been removed from the area.
- Failure to comply could result in death or serious injury.

0000002en

⚠ WARNING

EXHAUST HAZARD!

- NEVER operate the engine in an enclosed area such as a garage, tunnel, underground room, manhole or ship's hold without proper ventilation.
- NEVER block windows, vents, or other means of ventilation if the engine is operating in an enclosed area. All internal combustion engines create carbon monoxide gas during operation. Accumulation of this gas within an enclosure could cause illness or even death.
- Make sure that all connections are tightened to specifications after repair is made to the exhaust system.
- Failure to comply could result in death or serious injury.

0000003en

⚠ WARNING

ALCOHOL AND DRUG HAZARD!

- NEVER operate the engine while you are under the influence of alcohol or drugs.
- NEVER operate the engine when you are feeling ill.
- Failure to comply could result in death or serious injury.

0000004en

⚠ WARNING

EXPOSURE HAZARD!

- Wear personal protective equipment such as gloves, work shoes, eye and hearing protection as required by the task at hand.
- NEVER wear jewelry, unbuttoned cuffs, ties or loose-fitting clothing when you are working near moving / rotating parts such as the cooling fan, flywheel or PTO shaft.
- ALWAYS tie back long hair when you are working near moving / rotating parts such as a cooling fan, flywheel, or PTO shaft.
- NEVER operate the engine while wearing a headset to listen to music or radio because it will be difficult to hear the alert signals.
- Failure to comply could result in death or serious injury.

0000005en

⚠ WARNING

BURN HAZARD!

- If you must drain the engine oil while it is still hot, stay clear of the hot engine oil to avoid being burned.
- ALWAYS wear eye protection.
- Failure to comply could result in death or serious injury.

0000011en

⚠ WARNING

BURN HAZARD!

- Batteries contain sulfuric acid. NEVER allow battery fluid to come in contact with clothing, skin or eyes. Severe burns could result. ALWAYS wear safety goggles and protective clothing when servicing the battery. If battery fluid contacts the eyes and / or skin, immediately flush the affected area with a large amount of clean water and obtain prompt medical treatment.
- Failure to comply could result in death or serious injury.

0000007en

⚠ WARNING

HIGH-PRESSURE HAZARD!

- Avoid skin contact with the high-pressure diesel fuel spray caused by a fuel system leak such as a broken fuel injection line. High-pressure fuel can penetrate your skin and result in serious injury. If you are exposed to high-pressure fuel spray, obtain prompt medical treatment.
- NEVER check for a fuel leak with your hands. ALWAYS use a piece of wood or cardboard. Have your authorized Yanmar industrial engine dealer or distributor repair the damage.
- Failure to comply could result in death or serious injury.

0000008en

⚠ WARNING

SHOCK HAZARD!

- Turn off the battery switch (if equipped) or disconnect the negative battery cable before servicing the electrical system.
- Check the electrical harnesses for cracks, abrasions, and damaged or corroded connectors. ALWAYS keep the connectors and terminals clean.
- Failure to comply could result in death or serious injury.

0000009en

⚠ WARNING

ENTANGLEMENT HAZARD!

- Stop the engine before you begin to service it.
- NEVER leave the key in the key switch when you are servicing the engine. Someone may accidentally start the engine and not realize you are servicing it. This could result in a serious injury.
- If you must service the engine while it is operating, remove all jewelry, tie back long hair, and keep your hands, other body parts and clothing away from moving / rotating parts.
- Failure to comply could result in death or serious injury.

0000010en

⚠ WARNING

BURN HAZARD!

- Wait until the engine cools before you drain the engine coolant. Hot engine coolant may splash and burn you.
- Failure to comply could result in death or serious injury.

0000016en

⚠ WARNING

SUDDEN MOVEMENT HAZARD!

- Engaging the transmission or PTO at an elevated engine speed could result in unexpected movement of the equipment.
- Failure to comply could result in death or serious injury.

0000006en

⚠ WARNING

BURN HAZARD!

- Keep your hands and other body parts away from hot engine surfaces such as the muffler, exhaust pipe, turbocharger (if equipped) and engine block during operation and shortly after you shut the engine down. These surfaces are extremely hot while the engine is operating and could seriously burn you.
- Failure to comply could result in death or serious injury.

0000015en

⚠ WARNING

To prevent possible eye injury, always wear SAFETY GLASSES while servicing the engine.

0000013en

⚠ WARNING

FUME / BURN HAZARD!

- Always read and follow safety related precautions found on containers of hazardous substances like parts cleaners, primers, sealants and sealant removers.
- Failure to comply could result in death or serious injury.

0000014en

⚠ WARNING

Never apply over 40 psi (2.8 kgf/cm) to the waste gate actuator.

0000026en

⚠ WARNING

- Never inject fuel toward you. Since the fuel is injected at high pressure from the nozzle, it may penetrate the skin, resulting in injury.
- Never inject fuel toward a fire source. Atomized fuel is highly flammable and may cause a fire or burn skin.

0000028en

⚠ WARNING

- Never use the E-ECU for other purposes than intended or in other ways than specified by Yanmar. Doing so could result in the violation of emission control regulations and will void the product warranty.
- Improper use or misuse of the E-ECU may result in death or serious injury due to an abrupt and unexpected increase in engine speed.

9999999en

⚠ WARNING

- Be sure to use the E-ECU in conjunction with the engines whose models or serial numbers are specified by Yanmar.
  Other E-ECU/engine combinations than specified will void the engine warranty.
- Improper use or misuse of the E-ECU may result in death or serious injury due to an abrupt and unexpected increase in engine speed.

9999998en

⚠ WARNING

- Replacing the fuel injection pump involves rewriting the fuel injection data in the E-ECU.
  Be sure to contact your local Yanmar dealer before replacing the fuel injection pump.
  Failure to rewrite the fuel injection data before replacing the fuel injection pump will void the engine warranty.
- Improper use or misuse of the E-ECU may result in death or serious injury due to an abrupt and unexpected increase in engine speed.

9999997en

⚠ WARNING

- Replacing the E-ECU involves migrating the fuel injection data to the existing E-ECU to the new unit.
  Be sure to contact your local Yanmar dealer before replacing the E-ECU.
  Failure to migrate the fuel injection data before replacing the E-ECU will void the engine warranty.
- Improper use or misuse of the E-ECU may result in death or serious injury due to an abrupt and unexpected increase in engine speed.

9999996en

⚠ CAUTION

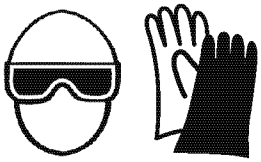

COOLANT HAZARD!

- Wear eye protection and rubber gloves when you handle long life or extended life engine coolant. If contact with the eyes or skin should occur, flush eyes and wash immediately with clean water.
- Failure to comply may result in minor or moderate injury.

0000005en

⚠ CAUTION

FLYING OBJECT HAZARD!

- ALWAYS wear eye protection when servicing the engine and when using compressed air or high-pressure water. Dust, flying debris, compressed air, pressurized water or steam may injure your eyes.
- Failure to comply may result in minor or moderate injury.

0000003en

⚠ CAUTION

Be sure to secure the engine solidly to prevent injury or damage to parts due to the engine falling during work on the engine.

0000009en

⚠ CAUTION

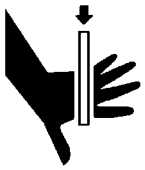

PINCH HAZARD!

Carefully rotate the alternator toward the cylinder block while loosening the V-belt. Failure to comply may result in minor or moderate injury.

0000014en

⚠ CAUTION

If any oil pump component clearance exceeds its limit, the oil pump must be replaced as an assembly.

0000015en

CAUTION

- Only use diesel fuels recommended by Yanmar for the best engine performance, to prevent engine damage and to comply with EPA / ARB warranty requirements.
- Only use clean diesel fuel.
- NEVER remove the primary strainer (if equipped) from the fuel tank filler port. If removed, dirt and debris could get into the fuel system causing it to clog.

0000004en

CAUTION

NEVER attempt to adjust the low or high idle speed limit screw. This may impair the safety and performance of the machine and shorten its life. If adjustment is ever required, contact your authorized Yanmar industrial engine dealer or distributor.

0000045en

CAUTION

If any problem is noted during the visual check, the necessary corrective action should be taken before you operate the engine.

0000021en

CAUTION

NEVER hold the key in the START position for longer than 15 seconds or the starter motor will overheat.

0000007en

CAUTION

Make sure the engine is installed on a level surface. If a continuously running engine is installed at an angle greater than (IDI = 25°, DI = 30°) in any direction or if an engine runs for short periods of time (less than three minutes) at an angle greater than (IDI = 30°, DI = 35°) in any direction, engine oil may enter the combustion chamber causing excessive engine speed and white exhaust smoke. This may cause serious engine damage.

0000010enTNV

CAUTION

Observe the following environmental operating conditions to maintain engine performance and avoid premature engine wear:

- **Avoid operating in extremely dusty conditions.**
- **Avoid operating in the presence of chemical gases or fumes.**
- **Avoid operating in a corrosive atmosphere such as salt water spray.**
- **NEVER install the engine in a floodplain unless proper precautions are taken to avoid being subject to a flood.**
- **NEVER expose the engine to the rain.**

0000003en

CAUTION

Observe the following environmental operating conditions to maintain engine performance and avoid premature engine wear:

- **The standard range of ambient temperatures for the normal operation of Yanmar engines is from +5°F (-15°C) to +113°F (+45°C).**
- **If the ambient temperature exceeds +113°F (+45°C) the engine may overheat and cause the engine oil to break down.**
- **If the ambient temperature is below +5°F (-15°C) the engine will be hard to start and the engine oil may not flow easily.**
- **Contact your authorized Yanmar industrial engine dealer or distributor if the engine will be operated outside of this standard temperature range.**

0000065en

CAUTION

The illustrations and descriptions of optional equipment in this manual, such as the operator's console, are for a typical engine installation. Refer to the documentation supplied by the optional equipment manufacturer for specific operation and maintenance instructions.

0000018en

CAUTION

If any indicator illuminates during engine operation, stop the engine immediately. Determine the cause and repair the problem before you continue to operate the engine.

0000029en

CAUTION

- Only use the engine oil specified. Other engine oils may affect warranty coverage, cause internal engine components to seize and / or shorten engine life.
- Prevent dirt and debris from contaminating the engine oil. Carefully clean the oil cap / dipstick and the surrounding area before you remove the cap.
- NEVER mix different types of engine oil. This may adversely affect the lubricating properties of the engine oil.
- NEVER overfill. Overfilling may result in white exhaust smoke, engine overspeed or internal damage.

0000005en

CAUTION

- Only use the engine coolant specified. Other engine coolants may affect warranty coverage, cause an internal buildup of rust and scale and / or shorten engine life.
- Prevent dirt and debris from contaminating the engine coolant. Carefully clean the radiator cap and the surrounding area before you remove the cap.
- NEVER mix different types of engine coolants. This may adversely affect the properties of the engine coolant.

0000006en

CAUTION

- NEVER overfill the engine with engine oil.
- ALWAYS keep the oil level between the upper and lower lines on the oil cap / dipstick.

0000015en

CAUTION

For maximum engine life, Yanmar recommends that when shutting the engine down, you allow the engine to idle, without load, for five minutes. This will allow the engine components that operate at high temperatures, such as the turbocharger (if equipped) and exhaust system, to cool slightly before the engine itself is shut down.

0000008en

CAUTION

NEVER use an engine starting aid such as ether. Engine damage will result.

0000009en

CAUTION

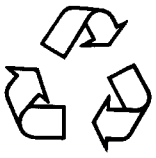

- ALWAYS be environmentally responsible.
- Follow the guidelines of the EPA or other governmental agencies for the proper disposal of hazardous materials such as engine oil, diesel fuel and engine coolant. Consult the local authorities or reclamation facility.
- NEVER dispose of hazardous materials irresponsibly by dumping them into a sewer, on the ground, or into ground water or waterways.
- Failure to follow these procedures may seriously harm the environment.

0000013en

CAUTION

NEVER engage the starter motor while the engine is running. This may damage the starter motor pinion and / or ring gear.

0000012en

CAUTION

New Engine Break-in:

- On the initial engine start-up, allow the engine to idle for approximately 15 minutes while you check for proper engine oil pressure, diesel fuel leaks, engine oil leaks, coolant leaks, and for proper operation of the indicators and / or gauges.
- During the first hour of operation, vary the engine speed and the load on the engine. Short periods of maximum engine speed and load are desirable. Avoid prolonged operation at minimum or maximum engine speeds and loads for the next four to five hours.
- During the break-in period, carefully observe the engine oil pressure and engine temperature.
- During the break-in period, check the engine oil and coolant levels frequently.

0000011en

CAUTION

- NEVER attempt to modify the engine's design or safety features such as defeating the engine speed limit control or the fuel injection quantity control.
- Failure to comply may impair the engine's safety and performance characteristics and shorten the engine's life. Any alterations to this engine may affect the warranty coverage of your engine. *See Yanmar Limited Warranty in Warranty Section.*

0000044enTNVDISM

CAUTION

Protect the air cleaner, turbocharger (if equipped) and electric components from damage when you use steam or high-pressure water to clean the engine.

0000014en

CAUTION

NEVER use high-pressure water or compressed air at greater than 28 psi (193 kPa; 19 686 mmAq) or a wire brush to clean the radiator fins. Radiator fins damage easily.

0000016en

CAUTION

NEVER attempt to adjust the low or high idle speed limit screw. This may impair the safety and performance of the machine and shorten its life. If the idle speed limit screws require adjustment, see your authorized Yanmar industrial engine dealer or distributor.

0000017en

CAUTION

The tightening torque in the Standard Torque Chart *(see General Service Information section)* should be applied only to the bolts with a "7" head. (JIS strength classification: 7T)

- **Apply 60% torque to bolts that are not listed.**
- **Apply 80% torque when tightened to aluminum alloy.**

0000023enTNVDISM

CAUTION

If any indicator fails to illuminate when the key switch is in the ON position, see your authorized Yanmar industrial engine dealer or distributor for service before operating the engine.

0000028en

CAUTION

Establish a periodic maintenance plan according to the engine application and make sure you perform the required periodic maintenance at the intervals indicated. Failure to follow these guidelines will impair the engine's safety and performance characteristics, shorten the engine's life and may affect the warranty coverage on your engine.

See Yanmar Limited Warranty in Warranty Section.

Consult your authorized Yanmar dealer or distributor for assistance when checking items marked with a ●.

0000024enTNVDISM

CAUTION

If the fuel filter / water separator is positioned higher than the fuel level in the fuel tank, water may not drip out when the fuel filter / water separator drain cock is opened. If this happens, turn the air vent screw on the top of the fuel filter / water separator 2-3 turns counterclockwise.

Be sure to tighten the air vent screw after the water has drained out.

0000025en

CAUTION

- When the engine is operated in dusty conditions, clean the air cleaner element more frequently.
- NEVER operate the engine with the air cleaner element(s) removed. This may allow foreign material to enter the engine and damage it.

0000026en

CAUTION

The maximum air intake restriction, in terms of differential pressure measurement, must not exceed 0.90 psi (6.23 kPa; 635 mmAq). Clean or replace the air cleaner element if the air intake restriction exceeds the above mentioned value.

0000046en

CAUTION

It is important to perform daily checks.

Periodic maintenance prevents unexpected downtime, reduces the number of accidents due to poor machine performance and helps extend the life of the engine.

0000060en

CAUTION

If the oil pump must be replaced, replace it as an assembly only. Do not replace individual components.

0000030en

CAUTION

Do not loosen or remove the four bolts retaining the fuel injection pump drive gear to the fuel injection pump hub. Do not disassemble the fuel injection pump drive gear from the hub. Correct fuel injection timing will be very difficult or impossible to achieve.

0000031en

CAUTION

The starter motor can be damaged if operated continuously longer than 10 seconds while performing the no-load test.

0000034en

CAUTION

Do not short-circuit the charging system between alternator terminals IG and L. Damage to the alternator will result.

0000035en

CAUTION

Do not connect a load between alternator terminals L and E. Damage to the alternator will result.

0000036en

CAUTION

Do not remove the positive (+) battery cable from alternator terminal B while the engine is operating. Damage to the alternator will result.

0000037en

CAUTION

Do not turn the battery switch OFF while the engine is operating. Damage to the alternator will result.

0000038en

CAUTION

Do not operate the engine if the alternator is producing unusual sounds. Damage to the alternator will result.

0000039en

CAUTION

If the engine coolant pump must be replaced, replace the engine coolant pump as an assembly only. Do not attempt to repair the engine coolant pump or replace individual components.

0000041en

CAUTION

Use a new special O-ring between the engine coolant pump and the joint. Be sure to use the special O-ring for each engine model. Although the O-ring dimensions are the same as a commercially available O-ring, the material is different.

0000042en

CAUTION

Remove or install the high-pressure fuel injection lines as an assembly whenever possible. Disassembling the high-pressure fuel injection lines from the retainers or bending any of the fuel lines will make it difficult to reinstall the fuel lines.

0000047en

CAUTION

After marking the position of the pump drive gear, do not rotate the engine crankshaft. Rotating the crankshaft will cause the fuel injection pump to become misaligned.

0000048en

CAUTION

Do not use a high-pressure wash directly on the alternator. Water will damage the alternator and result in inadequate charging.

0000049en

CAUTION

Do not reverse the positive (+) and negative (-) ends of the battery cable. The alternator diode and stator coil will be damaged.

0000050en

CAUTION

When the battery indicator goes out, it should not come on again. The battery indicator only comes on during operation if the alternator fails. However, if an LED is used in the battery indicator, the LED will shine faintly during normal operation.

0000051en

CAUTION

Using a non-specified V-belt will cause inadequate charging and shorten the belt life. Use the specified belt.

0000052en

CAUTION

Agricultural or other chemicals, especially those with a high sulfur content, can adhere to the IC regulator. This will corrode the conductor and result in battery over-charging (boiling) and charging malfunctions. Consult Yanmar before using the equipment in such an environment or the warranty is voided.

0000053en

CAUTION

Make sure that the combined total resistance of the battery cable in both directions between the starter motor and the battery is within the value indicated on the wiring diagram. The starter motor will malfunction or break down if the resistance is higher than the specified value.

0000054en

CAUTION

The starter motor is water-proofed according to JIS D 0203, R2 which protects the motor from rain or general cleaning. Do not use high-pressure wash or submerse the starter motor in water.

0000055en

CAUTION

Use a specialized battery charger to recharge a battery with a voltage of 8 volts or less. Booster starting a battery with a voltage of 8 volts or less will generate an abnormally high voltage and destroy electrical equipment.

0000056en

CAUTION

Make sure that the combined total resistance of the battery cable in both directions between the starter motor and the battery is within the value indicated in the *Battery Cable Resistance chart* in the *Electric Wiring Section* of this manual. The starter motor will malfunction and fail if the resistance is higher than the specified value.

0000057en

CAUTION

Removing the battery cables or the battery while the engine is operating may cause damage to the current limiter depending on the electrical equipment being used. This situation could cause loss of control of output voltage. The continuous high voltage of 23-24 volts (for 5000 rpm dynamo) will damage the current limiter and other electrical equipment.

0000058en

CAUTION

Reversing the battery cable connections at the battery or on the engine will destroy the SCR diode in the current limiter. This will cause the charging system to malfunction and may cause damage to the electrical harnesses.

0000059en

CAUTION

Avoid damage to the turbocharger or the engine. Do not spray blower wash fluid or water too quickly.

Use short strokes from a spray bottle to inject blower wash fluid or water into the turbocharger.

Spraying too much wash fluid or water, or spraying too quickly will damage the turbocharger.

0000063en

CAUTION

Do not allow any material to fall into the oil lines or the oil inlet and outlet ports of the turbocharger.

0000064en

CAUTION

If the waste valve does not meet specifications, replace the turbocharger or have it repaired by a qualified repair facility.

0000078en

CAUTION

- NEVER attempt to modify the engine's design or safety features such as defeating the engine speed limit control or the diesel fuel injection quantity control.
- Modifications may impair the engine's safety and performance characteristics and shorten the engine's life. Any alterations to this engine may void its warranty. Be sure to use Yanmar genuine replacement parts.

0000079en

CAUTION

Identify all parts and their location using an appropriate method. It is important that all parts are returned to the same position during the reassembly process.

0000080en

CAUTION

Each pressure adjusting shim removed or added changes the pressure threshold by approximately 275 psi (1.9 MPa, 19 kgf/cm^2). Adding adjusting shims increases the threshold pressure. Removing adjusting shims reduces the pressure threshold.

0000081en

CAUTION

Do not rotate the crankshaft with the injection pump removed.

0000083en

CAUTION

Keep the piston pin parts, piston assemblies, and connecting rod assemblies together to be returned to the same position during the reassembly process. Label the parts using an appropriate method.

0000088en

CAUTION

Do not allow the honing tool to operate in one position for any length of time. Damage to the cylinder wall will occur. Keep the tool in constant up-and-down motion.

0000090en

CAUTION

Any part which is found defective as a result of inspection or any part whose measured value does not satisfy the standard or limit must be replaced.

0000119en

CAUTION

Any part determined to not meet the service standard or limit before the next service, as determined from the state of current rate of wear, should be replaced even though the part currently meets the service standard limit.

0000120en

CAUTION

- NEVER remove or attempt to remove the tamper-proof devices from the full-load fuel adjusting screw or the high-speed throttle limit screw on the fuel injection pump and governor assembly. These adjustments have been made at the factory to meet all applicable emissions regulations and then sealed.
- NEVER attempt to make any adjustments to these sealed adjustment screws. If adjustments are required, they can be made only by a qualified fuel injection shop that will ensure the injection pump continues to meet all applicable emissions regulations and then replace the tamper-proof seals.
- Tampering with or removing these devices may void the "Yanmar Limited Warranty."

0000146en

CAUTION

Never use a steel wire brush to clean fuel injectors. Damage to the nozzle and other components is likely to result.

0000172en

CAUTION

Allow the engine to warm-up for at least five minutes and the idle speed of the engine to return to normal before engaging the transmission or any PTOs. Engaging the transmission or PTO at an elevated engine speed could result in an unexpected movement of the equipment.

0000159en

CAUTION

Shut down the engine if the fault indicator comes on.

Continuing running the engine with the fault indicator being on may result in a serious malfunction of or damage to the engine, and will void the engine warranty.

9999999en

CAUTION

Do not energize the starter for a period of longer than 15 seconds.

Take a pause of at least 30 seconds between energization of the starter.

Otherwise the starter could suffer damage.

9999998en

CAUTION

- High-pressure washing not recommended.
- Avoid using high-pressure washing for electronic or electric devices installed in, on or around the engine, including the E-ECU, relays and harness couplers.

Otherwise such devices may suffer malfunction due to water ingress into them.

9999997en

CAUTION

- Do not plug or unplug the E-ECU for a period of at least 6 seconds after power to the unit has been turned on or off.
- Do not touch connector pins of the E-ECU with bare hands.
  Doing so may result in corrosion of the connector pins and/or damage to the internal circuits of the E-ECU due to static electricity.
- Do not force a measuring probe into the female coupler.
  Doing so may cause contact failure of the connector pins, resulting in malfunction of the E-ECU.
- Take care to prevent water from entering the couplers when plugging or unplugging the connector.
  Water inside the couplers may cause corrosion, resulting in malfunction of the E-ECU.
- Avoid plugging/unplugging the connector more than approx. 10 times.
  Frequent plugging/unplugging of the connector may cause contact failure of the connector pins, resulting in malfunction of the E-ECU.
- Do not use the E-ECU that has ever suffered drop impact.

9999996en

CAUTION

Always check the battery for proper charge.

Otherwise the electronically controlled engines may fail to start.

9999995en

This Page Intentionally Left Blank

Section 4

GENERAL SERVICE INFORMATION

Page

Component Identification 4-3
Location of Labels 4-5
  Engine Nameplate (Typical) 4-6
Emission Control Regulations 4-6
  EPA / ARB Regulations - USA Only 4-6
Emission Control Labels 4-6
The 97/68/EC Directive Certified Engines 4-7
Engine Family 4-7
Function of Major Engine Components 4-8
MAIN ELECTRONIC CONTROL COMPONENTS AND FEATURES 4-9
Function of Cooling System Components 4-11
Diesel Fuel 4-12
  Diesel Fuel Specifications 4-12
  Filling The Fuel Tank 4-13
  Priming the Fuel System 4-15
Engine Oil 4-15
  Engine Oil Specifications 4-15
  Engine Oil Viscosity 4-16
  Checking Engine Oil 4-16
  Adding Engine Oil 4-17
  Engine Oil Capacity (Typical) 4-17
Engine Coolant 4-18
  Engine Coolant Specifications 4-19
  Filling Radiator with Engine Coolant 4-19
  Engine Coolant Capacity (Typical) 4-20
Specifications 4-21

Description of Model Number 4-21
Engine Speed Specifications 4-21
Engine General Specifications 4-22
Principal Engine Specifications 4-23
3TNV82A (~ EPA Tier2) 4-23
3TNV84 (~ EPA Tier2) 4-24
3TNV84T (~ EPA Tier2) 4-25
3TNV88 (~ EPA Tier2) 4-26
4TNV84 (~ EPA Tier2) 4-27
4TNV84T (~ EPA Tier2) 4-28
4TNV88 (~ EPA Tier2) 4-29
4TNV94L (~ EPA Tier2) 4-30
4TNV98 (~ EPA Tier2) 4-31
4TNV98T (~ EPA Tier2) 4-32
4TNV106 (~ EPA Tier2) 4-33
4TNV106T (~ EPA Tier2) 4-34
3TNV82A-B (complies with EPA Interim Tier4) 4-35
3TNV84T-B (complies with EPA Interim Tier4) 4-36
3TNV88-U (complies with EPA Interim Tier4) 4-37
3TNV88-B (complies with EPA Interim Tier4) 4-38
4TNV84T-Z (complies with EPA Interim Tier4) 4-39
4TNV88-U (complies with EPA Interim Tier4) 4-40
4TNV88-B (complies with EPA Interim Tier4) 4-41
4TNV98-E (complies with EPA Interim Tier4) 4-42
4TNV98-Z (complies with EPA Interim Tier4) 4-43
4TNV98T-Z (complies with EPA Tier3) 4-44
Engine Service Standards 4-45
Tightening Torques for Standard Bolts and Nuts 4-46
Abbreviations and Symbols 4-48
Abbreviations 4-48
Symbols 4-48
Unit Conversions 4-49
Unit Prefixes 4-49
Units of Length 4-49
Units of Volume 4-49
Units of Mass 4-49
Units of Force 4-49
Units of Torque 4-49
Units of Pressure 4-49
Units of Power 4-49
Units of Temperature 4-49

COMPONENT IDENTIFICATION

Figure 4-1 shows where the major engine components are located.

3TNV82A(-B),3TNV84,3TNV84T(-B),3TNV88(-B)(-U),4TNV84,4TNV88(-B)(-U), 4TNV94L,4TNV984TNV106,4TNV106T

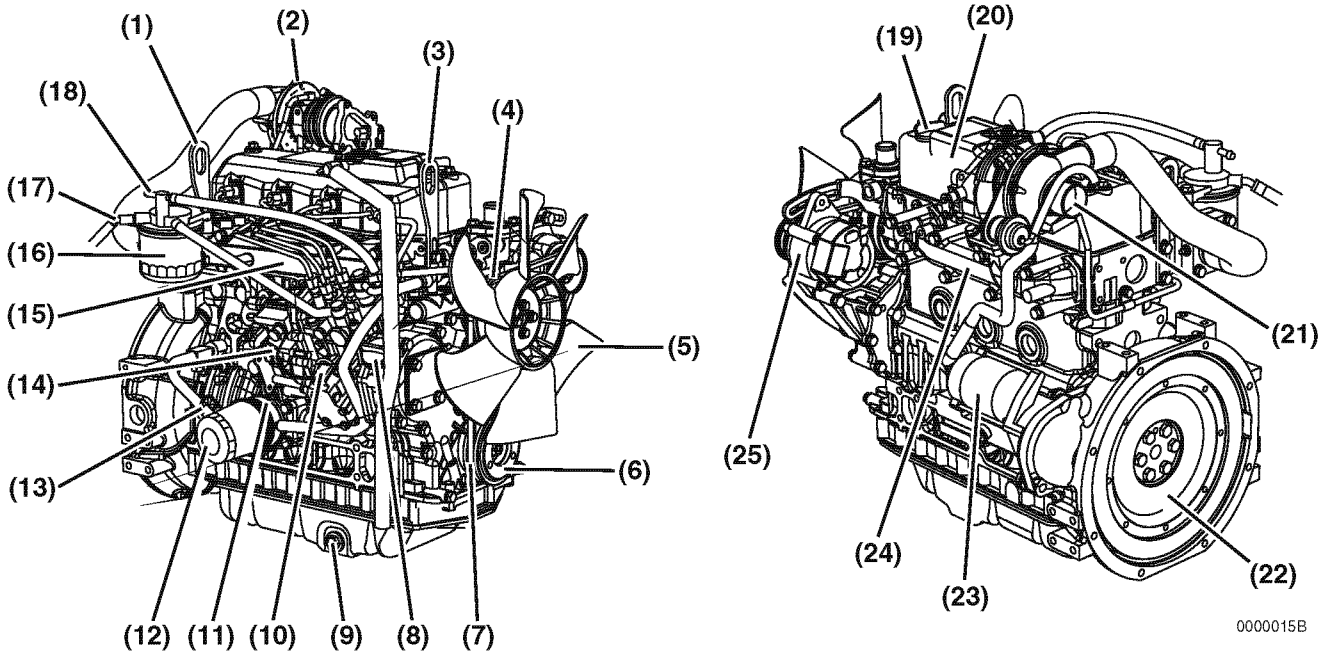

1 – Lifting Eye (Flywheel End)
2 – Turbocharger*
3 – Lifting Eye (Engine Cooling Fan End)
4 – Engine Coolant Pump
5 – Engine Cooling Fan
6 – Crankshaft V-Pulley
7 – V-Belt
8 – Side Filler Port (Engine Oil)
9 – Drain Plug (Engine Oil)**
10 – Fuel Injection Pump
11 – Engine Oil Cooler***
12 – Engine Oil Filter
13 – Dipstick (Engine Oil)
14 – Governor Lever
15 – Intake Manifold
16 – Fuel Filter
17 – Fuel Inlet
18 – Fuel Return to Fuel Tank
19 – Top Filler Port (Engine Oil)
20 – Rocker Arm Cover
21 – Air Intake Port (From Air Cleaner)
22 – Flywheel
23 – Starter Motor
24 – Exhaust Manifold
25 – Alternator

Figure 4-1

* Only applies to 3TNV84T, 4TNV84T, 4TNV98T, 4TNV106T
** The engine oil drain plug location may vary based on oil pan options.
*** Not standard on all direct injection models

Figure 4-2 shows where the major engine components are located.

4TNV84T-Z, 4TNV98-E, 4TNV98-Z, 4TNV98T-Z

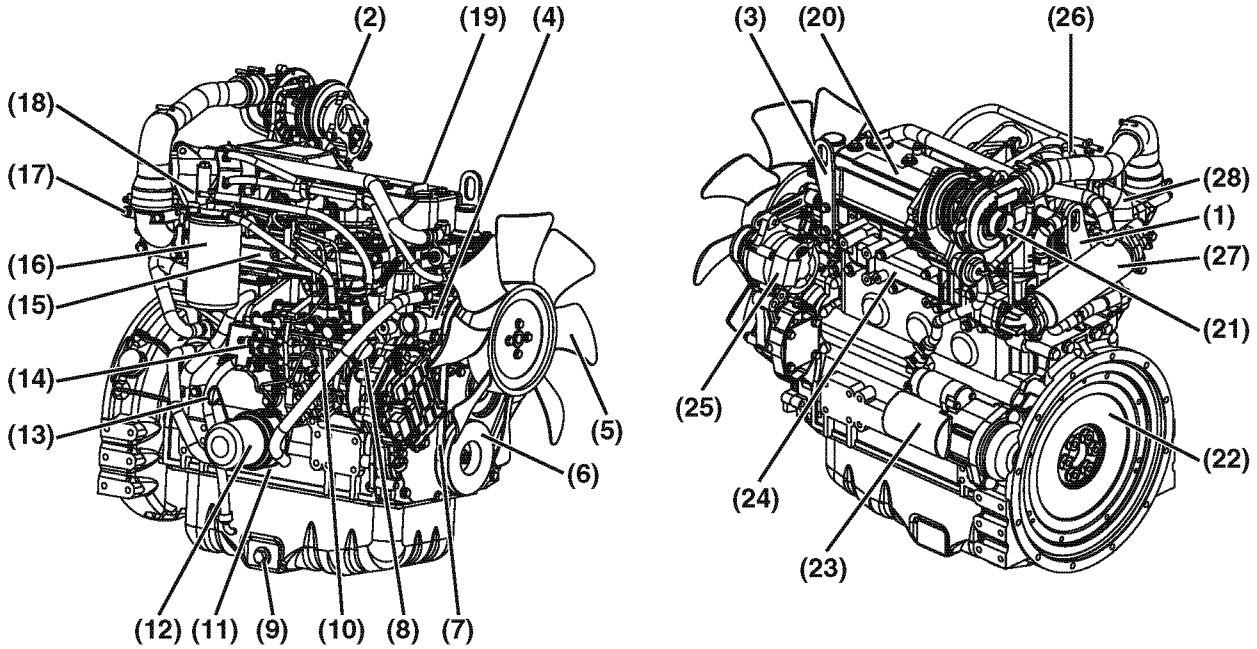

1 – Lifting Eye (Flywheel End)
2 – Turbocharger*
3 – Lifting Eye (Engine Cooling Fan End)
4 – Engine Coolant Pump
5 – Engine Cooling Fan
6 – Crankshaft V-Pulley
7 – V-Belt
8 – Side Filler Port (Engine Oil)
9 – Drain Plug (Engine Oil)**
10 – Fuel Injection Pump
11 – Engine Oil Cooler***
12 – Engine Oil Filter
13 – Dipstick (Engine Oil)
14 – Eco-governor
15 – Intake Manifold
16 – Fuel Filter
17 – Fuel Inlet
18 – Fuel Return to Fuel Tank
19 – Top Filler Port (Engine Oil)
20 – Rocker Arm Cover
21 – Air Intake Port (From Air Cleaner)
22 – Flywheel
23 – Starter Motor
24 – Exhaust Manifold
25 – Alternator
26 – EGR valve
27 – EGR cooler****
28 – EGR pipe

Figure 4-2

* Only applies to 4TNV84T-Z, 4TNV98T-Z.
** Engine oil drain plug location may vary based on oil pan options.
*** Not standard on all direct injection models.
**** Only applies to 4TNV84T-Z, 4TNV98T-Z.

LOCATION OF LABELS

Figure 4-3 shows the location of regulatory and safety labels on Yanmar TNV series engines.

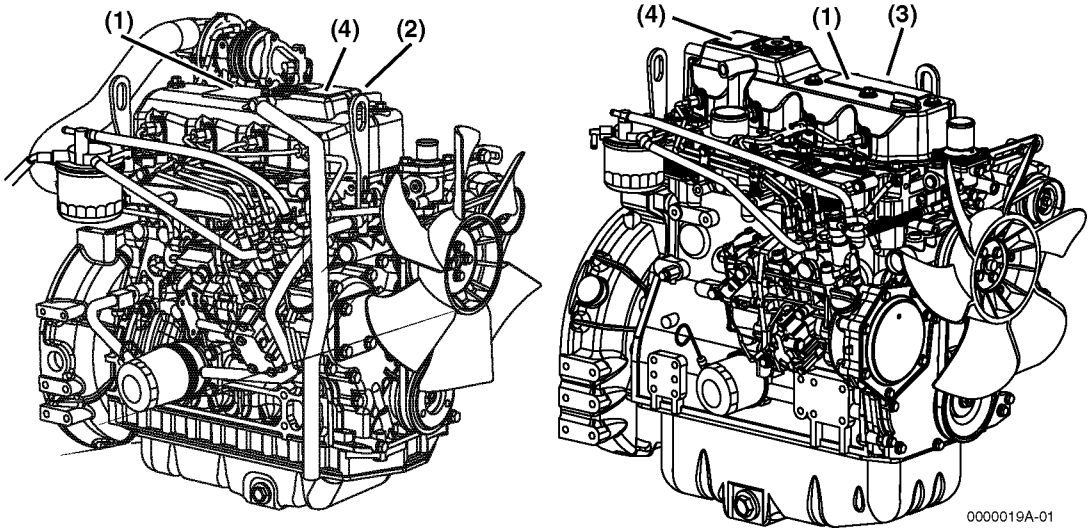

Figure 4-3

Location of labels/nameplates on direct injection model engines

Model	Engine Nameplate	EPA/ARB Certification Label	97/68/EC Emission Control Label
3TNV82A,3TNV84,3TNV84T,3TNV88 3TNV82A-B,3TNV88-B,3TNV88-U 3TNV84T-B	On the top of the locker arm cover(cooling fan end) **Figure 4-3 left, (4)**	On the top of the locker arm cover (flywheel end) **Figure 4-3 left, (1)**	On the exhaust side of the locker arm cover(near the flywheel) **Figure 4-3 left, (2)**
4TNV84,4TNV88,4TNV84T 4TNV88-B,4TNV88-U,4TNV84T-Z	On the top of the locker arm cover(cooling fan end) **Figure 4-3 left, (4)**	On the top of the locker arm cover(flywheel end) **Figure 4-3 left, (1)**	On the exhaust side of the locker arm cover(near the flywheel) **Figure 4-3 left, (1)**
4TNV94L,4TNV98,4TNV98T 4TNV106,4TNV106T 4TNV98-Z,4TNV98-E,4TNV98T-Z	On the top of the locker arm cover(flywheel end) **Figure 4-3 right, (4)**	On the top of the locker arm cover(center) **Figure 4-3 right, (1)**	On the top of the locker arm cover(fan end) **Figure 4-3 right, (3)**

Engine Nameplate (Typical)

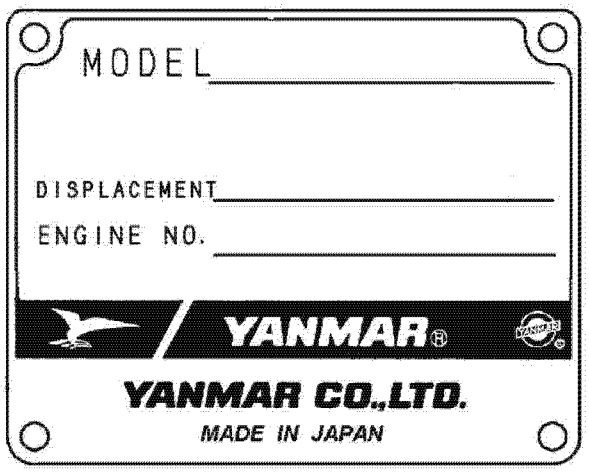

0003852

EMISSION CONTROL REGULATIONS

EPA / ARB Regulations - USA Only

Yanmar TNV engines meet Environmental Protection Agency (EPA) (U. S. Federal) emission control standards as well as the California Air Resources Board (ARB, California) regulations. Only engines that conform to ARB regulations can be sold in the State of California.

Refer to the specific EPA / ARB installation *(page 5-16)* and maintenance *(page 5-16)* in the *Periodic Maintenance Schedule* section of this manual. Also refer to the *Emission System Warranty on page 2-6*.

EMISSION CONTROL LABELS

Since emission control regulations are being issued on a global basis, it is necessary to identify which regulations a particular engine complies with. We have listed several different types of labels you might find on your engine.

EPA / CARB Labels (Typical)

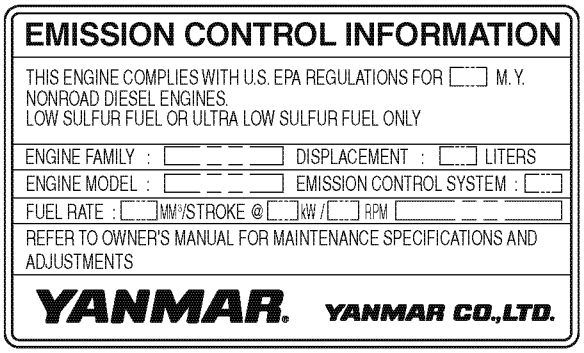

021751-00X

(EPA)

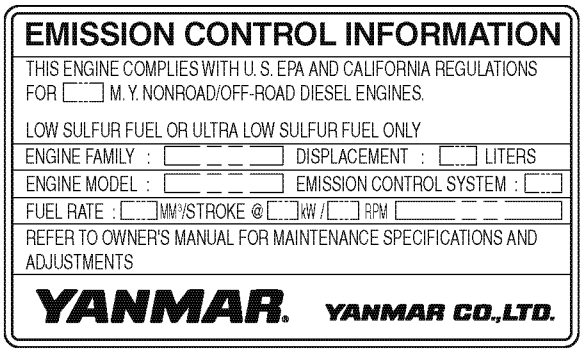

021752-00X

(EPA & CARB)

THE 97/68/EC DIRECTIVE CERTIFIED ENGINES

The engines described in this manual have been certified by the 97/68/EC Directive.

To identify the engines that meet this certification, the 97/68/EC emission control label is affixed on the engines.

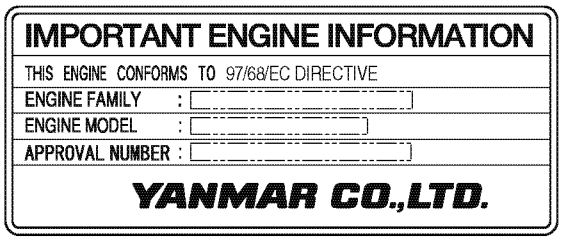

(97/68/EC)

ENGINE FAMILY

The EPA / ARB labels and the 97/68/EC label all have an *Engine Family* field. The following is an explanation of the *Engine Family* designation:

5 YDX L 1.33 M 3 N

- N — Method of air aspiration
- 3 — Number of cylinders
- M — Engine speed specifications
- 1.33 — Displacement (liter)
- L — Non-road / Off-road engine
- YDX — Yanmar Diesel
- 5 — *2005 Model Year

5*: 2005

6 : 2006

7: 2007

8: 2008

9: 2009

FUNCTION OF MAJOR ENGINE COMPONENTS

Components	Functions
Air Cleaner	The air cleaner prevents airborne contaminants from entering the engine. Since the air cleaner is application specific, it must be carefully selected by an application engineer. It is not part of the basic engine package as shipped from the Yanmar factory. Periodic replacement of the air cleaner filter element is necessary. See the *Periodic Maintenance Schedule on page 5-17* for the replacement frequency.
Alternator	The alternator is driven by a V-belt which is powered by the crankshaft V-pulley. The alternator supplies electricity to the engine systems and charges the battery while the engine is running.
Dipstick (Engine Oil)	The engine oil dipstick is used to determine the amount of engine oil in the crankcase.
Electric Fuel Pump	The electric fuel pump makes sure there is a constant supply of diesel fuel to the fuel injection pump. The electric fuel pump is electro-magnetic and runs on 12 VDC. It must be installed on every application. This is standard equipment with every engine.
Engine Oil Filter	The engine oil filter removes contaminants and sediments from the engine oil. Periodic replacement of the engine oil filter is necessary. See the *Periodic Maintenance Schedule on page 5-17* for the replacement frequency.
Engine Oil Cooler (If Equipped)	The engine oil cooler helps to keep the engine oil cool. Engine coolant from the cooling system is circulated through an adapter at the base of the engine oil filter assembly and then returned to the coolant pump inlet.
Fuel Filter	The fuel filter removes contaminants and sediments from the diesel fuel. Periodic replacement of the fuel filter is necessary. See the *Periodic Maintenance Schedule on page 5-17* for the replacement frequency. **Please note that the word "diesel" is implied throughout this manual when the word "fuel" is used.**
Fuel Filter / Water Separator	The fuel filter / water separator removes contaminants, sediments and water from the diesel fuel going to the fuel filter. This is a required component of the fuel system. This is standard equipment with every engine. The separator is installed between the fuel tank and the electric fuel pump. Periodically drain the water from the fuel filter / water separator.
Fuel Tank	The fuel tank is a reservoir that holds diesel fuel. When the fuel leaves the fuel tank it goes to the fuel filter / water separator. Next the fuel is pumped to the fuel filter by the electric fuel pump. Then the fuel goes to the fuel injection pump. Since the fuel is used to keep the fuel injection pump cool and lubricated, more fuel than necessary enters the injection pump. When the injection pump pressure reaches a preset value, a relief valve allows the excess fuel to be returned back to the fuel tank. The fuel tank is a required engine component.
Side and Top Filler Port (Engine Oil)	You can fill the crankcase with engine oil from either the side or the top filler port depending upon which one is most convenient.
Starter Motor	The starter motor is powered by the battery. When you turn the key switch in the operator's console to the START position, the starter motor engages with the ring gear installed on the flywheel and starts the flywheel in motion.
Turbocharger (Only applies to 3TNV84T, 4TNV84T, 4TNV98T, 4TNV106T)	The turbocharger pressurizes the air coming into the engine. It is driven by a turbine that is energized by exhaust gases.

MAIN ELECTRONIC CONTROL COMPONENTS AND FEATURES

4TNV84T-Z, 4TNV98-E, 4TNV98-Z, 4TNV98T-Z

Component/Feature		Description
Engine controller (E-ECU)		Adjusts the rack position of the fuel injection pump depending on the speed command signal from the accelerator sensor, thus regulating the engine speed and power. The engine controller also regulates the opening of the EGR valve depending on the engine speed and power. It serves as the master station for the following components/control features.
Electronic governor (Eco-governor)		Consists of the engine speed sensor, rack actuator, etc., and is directly connected to the fuel injection pump in order to regulate the rack position of the fuel injection pump depending on the signals communicated with the E-ECU.
Fuel injection pump (for Eco-governor)		Is of single plunger type and equipped with a CSD solenoid valve that allows the fuel injection timing to advance and the injection quantity to increase, thereby improving the cold start performance of the engine.
EGR valve		Controls the exhaust gas recirculation flow rate depending on the engine speed/load signals from the E-ECU. It is installed on the top of the exhaust manifold.
Accelerator sensor		Unlike mechanical governors, the Eco-governor has no governor lever. The accelerator sensor serves as the governor lever to provide the speed command signal (voltage signal) to the E-ECU for engine speed control. It is installed in the operator cabin of the driven machine. Constant speed engines for e.g. generator use do not require accelerator sensors because the engine speed can be shifted via a switch on the operator's console.
	Optional	CAN communication capability is available as an option.
Fault indicator		Is installed on the operator's console. If a fault occurs in the E-ECU or Eco-governor, the fault indicator flashes alerting the operator to a fault. The number of flashes and/or the flashing pattern vary depending on the type or source of the fault, enabling quick-fix.
	Optional	

Component/Feature		Description
Engine diagnosis tool	Option for service	Allows the operator to troubleshoot the cause of a problem based on detailed information regarding the problem occurring in the E-ECU or Eco-governor. This tool can also be used for data maintenance tasks including programming and mapping. *See* Troubleshooting Chart on page 7-113.
Engine coolant temperature sensor		Allows the CSD and ERG to be controlled in engine cold-start conditions.
Glow plugs Air heater	Optional	When the key switch is turned to the ON position, the glow plugs/air heater are/is energized for up to 15 seconds (glow plugs) or up to 23 seconds (air heater). The duration of energization depends on the engine coolant temperature. The HEAT indicator is on during energization. When the indicator goes out, turn the key switch to the START position to start the engine.
After heater	Optional	In extreme cold start conditions, the after heater is energized for up to 80 seconds or until the coolant temperature reaches 10°C after the engine has started, in order to help ensure the engine continues to run without stall.This option is not available for glow plug engines.
Droop control	Standard with VM series	Reduces the engine speed by a certain percentage from no load to full (rated) load in steady state operation. The same percentage droop is maintained even when the load increases at any no-load speed.
Isochronous control	Standard with CL series Optional with VM series	Offers a constant engine speed from no load to full load. The engine speed does not decrease even when the load increases at any no-load speed.
Low-idling speed up		Increases the low-idling speed to up to 1000 rpm depending on the engine coolant temperature. When the coolant temperature reaches a predetermined value, this feature returns the engine speed to the normal low idle setting, thus reducing the warm-up time.
High-idling speed down	Optional	Decreases the high-idling speed depending on the engine coolant temperature. When the coolant temperature falls to a predetermined value, this feature returns the engine speed to the normal high idle setting, thus minimizing the emission of white smoke at low temperatures.
Auto deceleration	Optional	Brings the running engine in low idle mode automatically when the accelerator pedal is not operated for a predetermined period of time. When the pedal is operated, i.e., the accelerator sensor is activated, the low idle mode is cancelled.

FUNCTION OF COOLING SYSTEM COMPONENTS

Components	Functions
Cooling System	The TNV engine is liquid-cooled by means of a cooling system. The cooling system consists of a radiator, radiator cap, engine cooling fan, engine coolant pump, thermostat, and reserve tank. ***Note that all cooling system components are required for proper engine operation. Since some of the components are application specific, they must be carefully selected by an application engineer. The application specific items are not part of the basic engine package as shipped from the Yanmar factory.***
Engine Cooling Fan	The engine cooling fan is driven by a V-belt which is powered by the crankshaft V-pulley. The purpose of the engine cooling fan is to circulate air through the radiator.
Engine Coolant Pump	The engine coolant pump circulates the engine coolant through the cylinder block and the cylinder head and returns the engine coolant to the radiator.
Radiator	The radiator acts as a heat exchanger. As the engine coolant circulates through the cylinder block it absorbs heat. The heat in the engine coolant is dissipated in the radiator. As the engine cooling fan circulates air through the radiator, the heat is transferred to the air.
Radiator Cap	The radiator cap controls the cooling system pressure. The cooling system is pressurized to raise the boiling point of the engine coolant. As the engine coolant temperature rises, the system pressure and the coolant volume increases. When the pressure reaches a preset value, the release valve in the radiator cap opens and the excess engine coolant flows into the reserve tank. As the engine coolant temperature is reduced, the system pressure and volume is reduced and the vacuum valve in the radiator cap opens allowing the engine coolant to flow from the reserve tank back into the radiator.
Reserve Tank	The reserve tank contains the overflow of engine coolant from the radiator. If you need to add engine coolant to the system, add it to the reserve tank; not the radiator.
Thermostat	A thermostat is placed in the cooling system to prevent the engine coolant from circulating into the radiator until the engine coolant temperature reaches a preset temperature. When the engine is cold, no engine coolant flows through the radiator. Once the engine reaches its operating temperature, the thermostat opens and allows the engine coolant to flow through the radiator. By letting the engine warm up as quickly as possible, the thermostat reduces engine wear, deposits and emissions.

DIESEL FUEL

Diesel Fuel Specifications

Diesel fuel should comply with the following specifications. The table lists several worldwide specifications for diesel fuels.

Diesel Fuel Specification	Location
ASTM D975 **No. 1D S15, S500** **No. 2D S15, S500**	USA
EN590:96	European Union
ISO 8217 DMX	International
BS 2869-A1 or A2	United Kingdom
JIS K2204 Grade No. 2	Japan
KSM-2610	Korea
GB252	China

Additional Technical Fuel Requirements

- The fuel cetane number should be equal to 45 or higher.
- The sulfur content must not exceed 0.5% by volume. Less than 0.05% is preferred.
  For electronically controlled engines 4TNV84T-Z, 4TNV98-Z, 4TNV98-E, and 4TNV98T-Z, it is mandatory to use fuel that does not contain 0.1% or more sulfur content.
  In general, using a high sulfur fuel may possible result in corrosion inside the cylinder.
  Especially in U.S.A. and Canada, Low Sulfur (300-500mg/kg sulfur content) or Ultra Low Sulfur fuel should be used.
- Bio-Diesel fuels. *See Bio-Diesel Fuels on page 4-12.*
- NEVER mix kerosene, used engine oil, or residual fuels with the diesel fuel.
- The water and sediment in the fuel should not exceed 0.05% by volume.
- Keep the fuel tank and fuel-handling equipment clean at all times.
- Poor quality fuel can reduce engine performance and / or cause engine damage.
- Fuel additives are not recommended. Some fuel additives may cause poor engine performance. Consult your Yanmar representative for more information.
- The ash content must not exceed 0.01% by volume.
- The carbon residue content must not exceed 0.35% by volume. Less than 0.1% is preferred.
- The total aromatics content should not exceed 35% by volume. Less than 30% is preferred.
- The PAH (polycyclic aromatic hydrocarbons) content should be below 10% by volume.
- The metal content of Na, Mg, Si, and Al should be equal to or lower than 1 mass ppm. (Test analysis method JPI-5S-44-95)
- Lubricity: The wear mark of WS1.4 should be Max. 0.018 in (460 µm) at HFRR test.

Bio-Diesel Fuels

In Europe and in the United States, as well as some other countries, non-mineral oil based fuel resources such as RME (Rapeseed Methyl Ester) and SOME (Soybean Methyl Ester), collectively known as FAME (Fatty Acid Methyl Esters), are being used as extenders for mineral oil derived diesel fuels.

Yanmar approves the use of bio-diesel fuels that do not exceed a blend of 5% (by volume) of FAME with 95% (by volume) of approved mineral oil derived diesel fuel. Such bio-diesel fuels are known in the marketplace as B5 diesel fuels.

These B5 diesel fuels must meet certain requirements.

1. The bio-fuels must meet the minimum specifications for the country in which they are used.
   - In Europe, bio-diesel fuels must comply with the European Standard EN14214.
   - In the United States, bio-diesel fuels must comply with the American Standard ASTM D-6751.
2. Bio-fuels should be purchased only from recognized and authorized diesel fuel suppliers.

Precautions and concerns regarding the use of bio-fuels:

1. Free methanol in FAME may result in corrosion of aluminum and zinc FIE components.
2. Free water in FAME may result in plugging of fuel filters and increased bacterial growth.
3. High viscosity at low temperatures may result in fuel delivery problems, injection pump seizures, and poor injection nozzle spray atomization.
4. FAME may have adverse effects on some elastomers (seal materials) and may result in fuel leakage and dilution of the engine lubricating oil.
5. Even bio-diesel fuels that comply with a suitable standard as delivered, will require additional care and attention to maintain the quality of the fuel in the equipment or other fuel tanks. It is important to maintain a supply of clean, fresh fuel. Regular flushing of the fuel system, and / or fuel storage containers, may be necessary.
6. The use of bio-diesel fuels that do not comply with the standards as agreed to by the diesel engine manufacturers and the diesel fuel injection equipment manufacturers, or bio-diesel fuels that have degraded as per the precautions and concerns above, may affect the warranty coverage of your engine. *See Yanmar Limited Warranty on page 2-3.*

Filling The Fuel Tank

⚠ DANGER

FIRE AND EXPLOSION HAZARD!

- **Diesel fuel is flammable and explosive under certain conditions.**
- **Only fill the fuel tank with diesel fuel. Filling the fuel tank with gasoline may result in a fire and will damage the engine.**
- **NEVER refuel with the engine running.**
- **Wipe up all spills immediately.**
- **Keep sparks, open flames or any other form of ignition (match, cigarette, static electric source) well away when refueling.**
- **NEVER overfill the fuel tank.**
- **Fill the fuel tank. Store any containers containing fuel in a well-ventilated area, away from any combustibles or sources of ignition.**
- **Failure to comply will result in death or serious injury.**

0000005en

⚠ DANGER

FIRE AND EXPLOSION HAZARD!

- Diesel fuel is flammable and explosive under certain conditions.
- Be sure to place the diesel fuel container on the ground when transferring the diesel fuel from the pump to the container. Hold the hose nozzle firmly against the side of the container while filling it. This prevents static electricity buildup which could cause sparks and ignite fuel vapors.
- NEVER place diesel fuel or other flammable material such as oil, hay or dried grass close to the engine during engine operation or shortly after shutdown.
- Failure to comply will result in death or serious injury.

0000014en

⚠ DANGER

FIRE AND EXPLOSION HAZARD!

- Diesel fuel is flammable and explosive under certain conditions.
- Before you operate the engine, check for fuel leaks. Replace rubberized fuel hoses every two years or every 2000 hours of engine operation, whichever comes first, even if the engine has been out of service. Rubberized fuel lines tend to dry out and become brittle after two years or 2000 hours of engine operation, whichever comes first.
- Failure to comply will result in death or serious injury.

0000015en

CAUTION

- Only use diesel fuels recommended by Yanmar for the best engine performance, to prevent engine damage and to comply with EPA / ARB warranty requirements.
- Only use clean diesel fuel.
- NEVER remove the primary strainer (if equipped) from the fuel tank filler port. If removed, dirt and debris could get into the fuel system causing it to clog.

0000004en

Note that a typical fuel tank is shown. The fuel tank on your equipment may be different.

1. Clean the area around the fuel cap **(Figure 4-4, (1))**.
2. Remove the fuel cap **(Figure 4-4, (1))** from the fuel tank **(Figure 4-4, (2))**.
3. Observe the fuel level sight gauge **(Figure 4-4, (3))** and stop fueling when the gauge shows the fuel tank is full. NEVER overfill the fuel tank.
4. Replace the fuel cap **(Figure 4-4, (1))** and hand tighten. Over-tightening the fuel cap will damage it.

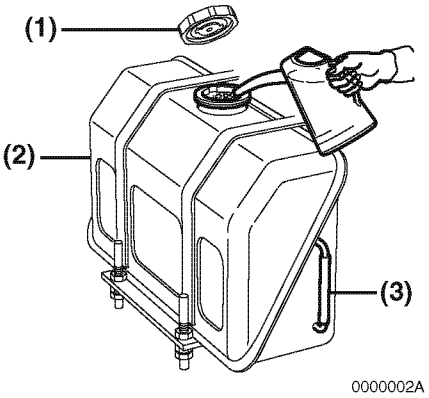

Figure 4-4

Priming the Fuel System

The fuel system needs to be primed under certain conditions:

- Before starting the engine for the first time.
- After running out of fuel and fuel has been added to the fuel tank.
- After fuel system maintenance such as changing the fuel filter and draining the fuel filter / water separator, or replacing a fuel system component.

To prime the fuel system:

1. Turn the key to the ON position for 10 - 15 seconds. This will allow the electric fuel pump to prime the fuel system.
2. NEVER use the starter motor to crank the engine in order to prime the fuel system. This may cause the starter motor to overheat and damage the coils, pinion and / or ring gear.

ENGINE OIL

CAUTION

- **Only use the engine oil specified. Other engine oils may affect warranty coverage, cause internal engine components to seize and / or shorten engine life.**
- **Prevent dirt and debris from contaminating the engine oil. Carefully clean the oil cap / dipstick and the surrounding area before you remove the cap.**
- **NEVER mix different types of engine oil. This may adversely affect the lubricating properties of the engine oil.**
- **NEVER overfill. Overfilling may result in white exhaust smoke, engine overspeed or internal damage.**

0000005en

Engine Oil Specifications

Use an engine oil that meets or exceeds the following guidelines and classifications:

Service Categories

- API Service Categories CD or higher (Grade CF or higher for EGR-equipped engines 4TNV84T-Z, 4TNV98-Z, 4TNV98-E, and 4TNV98T-Z)
- ACEA Service Categories E-3, E-4, and E-5
- JASO Service Category DH-1

Definitions

- API Classification (American Petroleum Institute)
- ACEA Classification (Association des Constructeurs Européens d'Automobilies)

- JASO (Japanese Automobile Standards Organization)

Notes:

- Be sure the engine oil, engine oil storage containers, and engine oil filling equipment are free of sediment and water.
- Change the engine oil after the first 50 hours of operation and then every 250 hours thereafter.
- Select the oil viscosity based on the ambient temperature where the engine is being operated. See the SAE Service Grade Viscosity Chart **(Figure 4-5)**.
- Yanmar does not recommend the use of engine oil "additives."

Additional Technical Engine Oil Requirements:

The engine oil must be changed when the Total Base Number (TBN) has been reduced to 1.0 mgKOH/g test method; JIS K-201-5.2-2 (HCI), ASTM D4739 (HCI).

Engine Oil Viscosity

Select the appropriate engine oil viscosity based on the ambient temperature and use the SAE Service Grade Viscosity Chart in **Figure 4-5**.

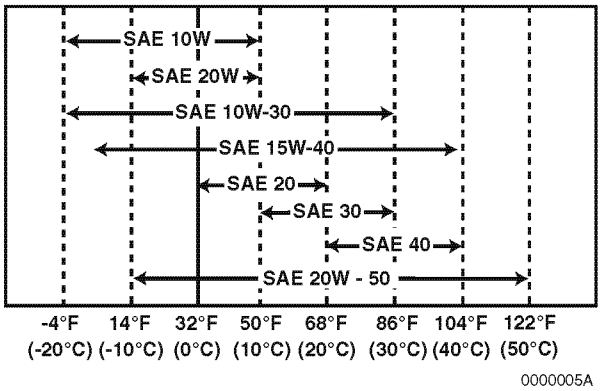

Figure 4-5

Checking Engine Oil

1. Make sure the engine is level.
2. Remove the dipstick **(Figure 4-6, (1))** and wipe it with clean cloth.
3. Fully reinsert the dipstick.
4. Remove the dipstick. The oil level should be between the upper **(Figure 4-6, (2))** and lower **(Figure 4-6, (3))** lines on the dipstick.
5. Fully reinsert the dipstick.

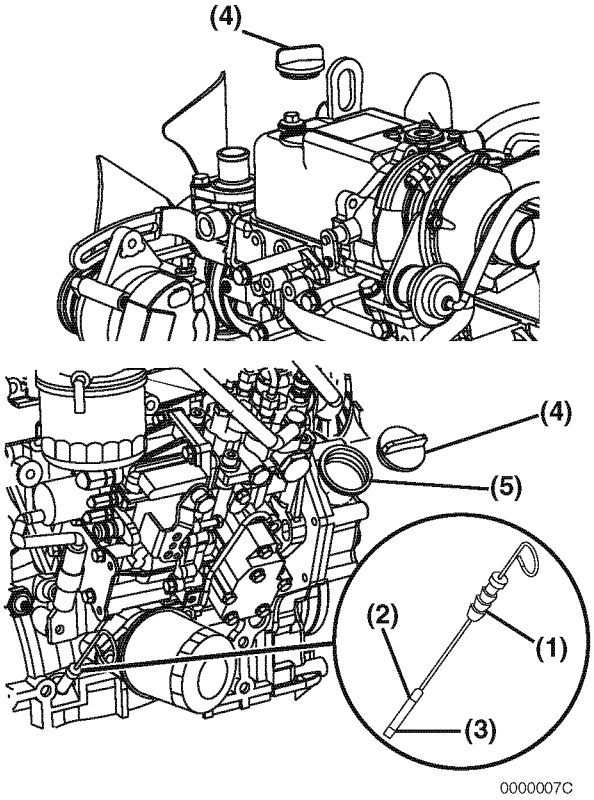

Figure 4-6

Adding Engine Oil

1. Make sure the engine is level.
2. Remove the oil cap **(Figure 4-6, (4))**.
3. Add the indicated amount of engine oil at the top or the side engine oil filler port **(Figure 4-6, (5))**.
4. Wait three minutes and check the oil level.
5. Add more oil if necessary.
6. Reinstall the oil cap **(Figure 4-6, (4))** and hand-tighten. Over-tightening may damage the cap.

Engine Oil Capacity (Typical)

Note: These are the engine oil capacities associated with a “deep standard” oil pan. The oil capacity will vary dependant upon which optional oil pan is used. Refer to the operation manual provided by the driven machine manufacturer for the actual engine oil capacity of your machine.

The following are the engine oil capacities for various Yanmar TNV engines.

Engine Model	Dipstick Upper Limit / Lower Limit
3TNV82A(-B)	5.8 / 3.8 qt (5.5 / 3.6 L)
3TNV84,3TNV84T(-B)	7.1 / 4.1 qt (6.7 / 3.9 L)
3TNV88(-B)(-U)	7.1 / 4.1 qt (6.7 / 3.9 L)
4TNV84,4TNV84T(-Z)	7.8 / 4.2 qt (7.4 / 4.0 L)
4TNV88(-B)(-U)	7.8 / 4.2 qt (7.4 / 4.0 L)
4TNV94L	11.1 / 6.3 qt (10.5 / 6.0 L)
4TNV98(-Z)(-E), 4TNV98T(-Z)	11.1 / 6.3 qt (10.5 / 6.0 L)
4TNV106(CL), 4TNV106T(CL)	14.8 / 5.3 qt (14.0 / 5.0 L)
4TNV106(VM), 4TNV106T(VM)	14.8 / 6.9 qt (14.0 / 6.5 L)

ENGINE COOLANT

DANGER

SCALD HAZARD!

- NEVER remove the radiator cap if the engine is hot. Steam and hot engine coolant will spurt out and seriously burn you. Allow the engine to cool down before you attempt to remove the radiator cap.
- Tighten the radiator cap securely after you check the radiator. Steam can spurt out during engine operation if the cap is loose.
- ALWAYS check the level of the engine coolant by observing the reserve tank.
- Failure to comply will result in death or serious injury.

0000002en

WARNING

BURN HAZARD!

- Wait until the engine cools before you drain the engine coolant. Hot engine coolant may splash and burn you.
- Failure to comply could result in death or serious injury.

0000016en

CAUTION

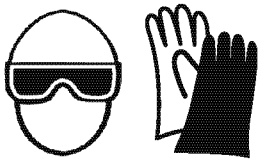

COOLANT HAZARD!

- Wear eye protection and rubber gloves when you handle long life or extended life engine coolant. If contact with the eyes or skin should occur, flush eyes and wash immediately with clean water.
- Failure to comply may result in minor or moderate injury.

0000005en

CAUTION

- Only use the engine coolant specified. Other engine coolants may affect warranty coverage, cause an internal buildup of rust and scale and / or shorten engine life.
- Prevent dirt and debris from contaminating the engine coolant. Carefully clean the radiator cap and the surrounding area before you remove the cap.
- NEVER mix different types of engine coolants. This may adversely affect the properties of the engine coolant.

0000006en

Engine Coolant Specifications

Use a Long Life Coolant (LLC) or an Extended Life Coolant (ELC) that meets or exceeds the following guidelines and specifications:

Additional Technical Coolant Specifications:

- ASTM D6210, D4985 (US)
- JIS K-2234 (Japan)
- SAE J814C, J1941, J1034 or J2036 (International)

Alternative Engine Coolant

If an Extended or Long Life Coolant is not available, alternatively, you may use an ethylene glycol or propylene glycol based conventional coolant (green).

Notes:

- ALWAYS use a mix of coolant and water. NEVER use water only.
- Mix the coolant and water per the mixing instructions on the coolant container.
- Water quality is important to coolant performance. Yanmar recommends that soft, distilled, or demineralized water be used to mix with coolants.
- NEVER mix extended or long life coolants and conventional (green) coolants.
- NEVER mix different types and / or colors of extended life coolants.
- Replace the coolant every 1000 engine hours or once a year.

Filling Radiator with Engine Coolant

Fill the radiator and reserve tank as follows. This procedure is for filling the radiator for the first time or refilling it after it is flushed. Note that a typical radiator is illustrated **(Figure 4-7)**.

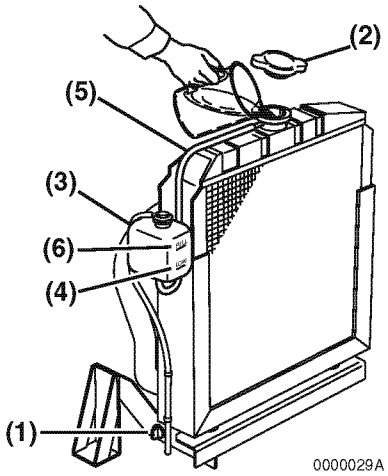

Figure 4-7

1. Check to be sure the radiator drain plug is installed and tightened or the drain cock **(Figure 4-7, (1))** is closed. Also make sure the coolant drain plug **(Figure 4-8, (1))** in the cylinder block is closed or the oil coolant hoses **(Figure 4-9, (1))** are installed at the oil cooler.

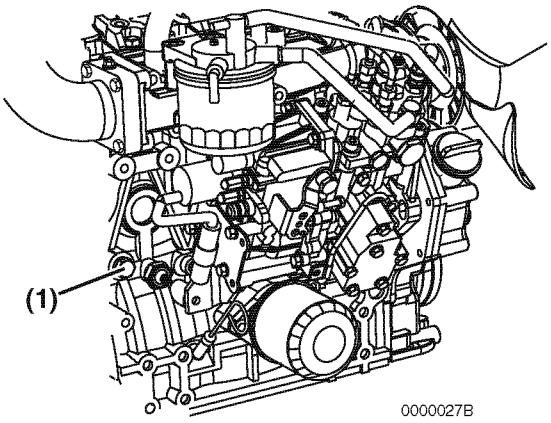

Figure 4-8

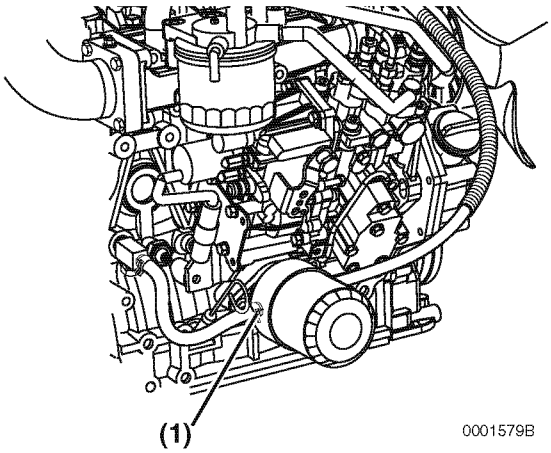

Figure 4-9

2. Remove the radiator cap **(Figure 4-7, (2))** by turning it counter-clockwise about 1/3 of a turn.
3. Pour the engine coolant *slowly* into the radiator until it is even with the lip of the engine coolant filler port. Make sure that air bubbles do not develop as you fill the radiator.
4. Reinstall the radiator cap **(Figure 4-7, (2))**. Align the tabs on the back side of the radiator cap with the notches on the engine coolant filler port. Press down and turn the cap clockwise about 1/3 of a turn.
5. Remove the cap on the reserve tank **(Figure 4-7, (3))**, and fill it to the LOW (COLD) mark **(Figure 4-7, (4))** with engine coolant. Reinstall the cap.
6. Check the hose **(Figure 4-7, (5))** that connects the reserve tank **(Figure 4-7, (3))** to the radiator. Be sure it is securely connected and there are no cracks or damage. If the hose is damaged, the engine coolant will leak out instead of going into the reserve tank.
7. Run the engine until it is at operating temperature. Check the level of engine coolant in the reserve tank. When the engine is running and the engine coolant is at normal temperature, the coolant level in the tank should be at the FULL (HOT) mark **(Figure 4-7, (6))**. If the engine coolant is not at the FULL (HOT) mark **(Figure 4-7, (6))**, add additional engine coolant to the reserve tank to bring the level to the FULL (HOT) mark.

Engine Coolant Capacity (Typical)

Note: The capacities listed are for the engine only without a radiator. Refer to the operation manual provided by the driven machine manufacturer for the actual engine coolant capacity on your machine.

The following are the engine coolant capacities for various Yanmar TNV engines.

Engine Model	Engine Coolant Capacity
3TNV82A(-B)	1.9 qt (1.8 L)
3TNV84,3TNV84T(-B)	2.1 qt (2.0 L)
3TNV88(-B)(-U)	2.1 qt (2.0 L)
4TNV84,4TNV84T(-Z)	2.9 qt (2.7 L)
4TNV88(-B)(-U)	2.9 qt (2.7 L)
4TNV94L	4.4 qt (4.2 L)
4TNV98(-Z)(-E), 4TNV98T(-Z)	4.4 qt (4.2 L)
4TNV106, 4TNV106T	6.3 qt (6.0 L)

SPECIFICATIONS

Description of Model Number

3 TNV 82 A T - Z 0 00

- 00 — Customer Code
- 0 — Rated RPM
- Z — Governor Type Symbol (Indicating Conformance to EPA Tier 3/Interim Tier 4 Standards)

Governor Type Symbol	Governor Type	Applicable engine
Z	Electronic Governor (Eco-governor)	Non-derated engine
B	Mechanical Governor	
E	Electronic Governor (Eco-governor)	Derated engine
U	Mechanical Governor	

- T — Turbocharged (No symbol indicates naturally aspirated)
- A — Engine Sub Series
- 82 — Cylinder Bore (mm)
- TNV — Engine Series
- 3 — No. of Cylinders

Engine Speed Specifications

Notation	Available Engine Speed	Intended Uses
VH	3200 - 3600 RPM (min^{-1})	Lawn Mower, Construction, Industrial Machine
VM	2000 - 3000 RPM (min^{-1})	Agricultural, Construction, Industrial Machines
CH	3000 or 3600 RPM (min^{-1})	2-pole Generator Sets, Irrigation Pumps
CL	1500 or 1800 RPM (min^{-1})	4-pole Generator Sets, Irrigation Pumps

VH: Variable High Speed
VM: Variable Medium Speed
CH: Constant High Speed
CL: Constant Low Speed

Engine General Specifications

Type	Vertical In-line, Water Cooled, 4-Cycle Diesel Engine	
Combustion System	Direct Injection Models	Direct Injection
	Indirect Injection Models	Swirl Chamber (Ball-Type)
Starting System	Electric Starting	
Cooling System	Radiator	
Lubricating System	Forced Lubrication with Trochoid Pump	
PTO Position	Flywheel End	
Direction of Rotation	Counterclockwise Viewed from Flywheel End	

Notes:

1. The information described in *Principal Engine Specifications* is for a “standard” engine. To obtain the information for the engine installed in your driven machine, please refer to the manual provided by the driven machine manufacturer.
2. Engine rating conditions are as follows (SAE J1349, ISO 3046/1):

- Atmospheric Condition: Room temperature 77°F (25°C), Atmospheric pressure 29.53 in. Hg (100 kPa, 750 mm Hg), Relative humidity 30%
- Fuel Temperature at Fuel Injector Pump Inlet: 104°F (40°C)
- Fuel Feeding Pressure: 20 ± 10 kPa (net) after engine break-in has been performed with the cooling fan, air cleaner and muffler installed to the engine.
- With Cooling Fan, Air Cleaner, Muffler: Yanmar Standard
- After the Engine Break-In Period. Output Allowable Deviation: ± 3%
- 1 PS = 0.7355 kW
- 1 hp SAE (Society of Automotive Engineers) = 0.7457 kW

PRINCIPAL ENGINE SPECIFICATIONS

3TNV82A (~ EPA Tier2)

Engine Model	3TNV82A								
Version	CL			VM					
Type	Vertical In-line Diesel Engine								
Combustion System	Direct Injection								
Aspiration	Natural								
No. of Cylinders	3								
Bore × Stroke	82 × 84mm								
Displacement	1.331L								
Continuous Rated Output	min^{-1}	1500	1800						
	kW	9.9	12.0						
	PS	13.5	16.3						
Max. Rated Output (Net)	min^{-1}	1500	1800	2000	2200	2400	2600	2800	3000
	kW	11.0	13.2	14.6	16.0	17.5	19.0	20.4	21.9
	PS	14.9	17.9	19.9	21.8	23.8	25.8	27.8	29.8
High Idling	min^{-1}	1600 ± 25	1895 ± 25	2180 ± 25	2375 ± 25	2570 ± 25	2780 ± 25	2995 ± 25	3180 ± 25
Engine Weight (Dry) *with Flywheel Housing	138kg			128 kg					
PTO Position	Flywheel End								
Direction of Rotation	Counterclockwise Viewed From Flywheel End								
Cooling System	Liquid-Cooled with Radiator								
Lubricating System	Forced Lubrication with Trochoid Pump								
Normal Oil Pressure at Rated Engine Speed	0.34 - 0.49 MPa							0.39 - 0.54 MPa	
Normal Oil Pressure at Low Idle Speed	0.06 MPa								
Starting System	Electric Starting (Starter Motor: DC12V (1.2 kW)) ***								
	Alternator: DC12V, 40A***								
	Recommended Battery Capacity: 12V, 55Ah*** (5h rating)								
Dimensions (L × W × H)*	553 × 489 × 565 mm			528 × 489 × 565 mm					
Engine Oil Pan Capacity**	5.5/3.6L (Dipstick Upper Limit / Lower Limit)								
Engine Coolant Capacity	1.8L Engine Only								
Standard Cooling Fan	335mm O.D., 6 Blade Pusher-Type ***								
Crank V-pulley dia./ Fan V-pulley dia.	ϕ120/ ϕ90mm ***			ϕ110/ ϕ110mm ***					

* *Engine specifications without radiator.*

** *Engine oil capacity for a "Deep Standard" oil pan. Refer to the operation manual provided by the driven machine manufacturer for the actual engine oil capacity of your machine.*

*** *May vary depending on application.*

3TNV84 (~ EPA Tier2)

Engine Model	3TNV84								
Version	CL			VM					
Type	Vertical In-line Diesel Engine								
Combustion System	Direct Injection								
Aspiration	Natural								
No. of Cylinders	3								
Bore × Stroke	84 × 90mm								
Displacement	1.496L								
Continuous Rated Output	min^{-1}	1500	1800						
	kW	11.3	13.5						
	PS	15.3	18.3						
Max. Rated Output (Net)	min^{-1}	1500	1800	2000	2200	2400	2600	2800	3000
	kW	12.4	14.8	16.4	18.1	19.7	21.3	23.0	24.6
	PS	16.8	20.1	22.3	24.6	26.8	29.0	31.3	33.5
High Idling	min^{-1}	1600 ± 25	1895 ± 25	2180 ± 25	2400 ± 25	2590 ± 25	2810 ± 25	2995 ± 25	3210 ± 25
Engine Weight (Dry) *with Flywheel Housing	161kg			155kg					
PTO Position	Flywheel End								
Direction of Rotation	Counterclockwise Viewed From Flywheel End								
Cooling System	Liquid-Cooled with Radiator								
Lubricating System	Forced Lubrication with Trochoid Pump								
Normal Oil Pressure at Rated Engine Speed	0.34 - 0.49 MPa			0.39 - 0.54 MPa					
Normal Oil Pressure at Low Idle Speed	0.06 MPa								
Starting System	Electric Starting (Starter Motor: DC12V (1.2 kW)) ***								
	Alternator: DC12V, 40A***								
	Recommended Battery Capacity: 12V, 55 Ah*** (5h rating)								
Dimensions (L × W × H)*	589 × 486 × 622mm			564 × 486 × 622mm					
Engine Oil Pan Capacity**	6.7/3.9L (Dipstick Upper Limit / Lower Limit)								
Engine Coolant Capacity	2.0L Engine Only								
Standard Cooling Fan	335mm O.D., 6 Blade Pusher-Type ***								
Crank V-pulley dia./ Fan V-pulley dia.	ϕ120/ ϕ90mm ***			ϕ110/ ϕ110mm ***					

* *Engine specifications without radiator.*

** *Engine oil capacity for a "Deep Standard" oil pan. Refer to the operation manual provided by the driven machine manufacturer for the actual engine oil capacity of your machine.*

*** *May vary depending on application.*

3TNV84T (~ EPA Tier2)

Engine Model	3TNV84T						
Version	CL			VM			
Type	Vertical In-line Diesel Engine						
Combustion System	Direct Injection						
Aspiration	Turbocharged						
No. of Cylinders	3						
Bore × Stroke	84 × 90mm						
Displacement	1.496L						
Continuous Rated Output	min^{-1}	1500	1800				
	kW	14.0	16.5				
	PS	19.0	22.5				
Max. Rated Output (Net)	min^{-1}	1500	1800	2400	2600	2800	3000
	kW	15.8	18.8	25.0	26.8	29.1	30.9
	PS	21.5	25.5	34.0	36.5	39.5	42.0
High Idling	min^{-1}	1600 ± 25	1895 ± 25	2590 ± 25	2810 ± 25	2995 ± 25	3210 ± 25
Engine Weight (Dry) *with Flywheel Housing	161 kg			155 kg			
PTO Position	Flywheel End						
Direction of Rotation	Counterclockwise Viewed From Flywheel End						
Cooling System	Liquid-Cooled with Radiator						
Lubricating System	Forced Lubrication with Trochoid Pump						
Normal Oil Pressure at Rated Engine Speed	0.29 - 0.44 MPa			0.34 - 0.49 MPa		0.39 - 0.54 MPa	
Normal Oil Pressure at Low Idle Speed	0.06 MPa						
Starting System	Electric Starting (Starter Motor: DC12V (1.2 kW)) ***						
	Alternator: DC12V, 40A***						
	Recommended Battery Capacity: 12V,55 Ah*** (5h rating)						
Dimensions (L × W × H)*	589 × 486 × 622mm			564 × 486 × 622mm			
Engine Oil Pan Capacity**	6.7/3.9L (Dipstick Upper Limit / Lower Limit)						
Engine Coolant Capacity	2.0L Engine Only						
Standard Cooling Fan	350mm O.D., 6 Blade Pusher-Type ***						
Crank V-pulley dia./ Fan V-pulley dia.	ϕ120/ ϕ90mm ***			ϕ110/ ϕ110mm ***			

* *Engine specifications without radiator.*

** *Engine oil capacity for a "Deep Standard" oil pan. Refer to the operation manual provided by the driven machine manufacturer for the actual engine oil capacity of your machine.*

*** *May vary depending on application.*

3TNV88 (~ EPA Tier2)

Engine Model	3TNV88								
Version	CL			VM					
Type	Vertical In-line Diesel Engine								
Combustion System	Direct Injection								
Aspiration	Natural								
No. of Cylinders	3								
Bore × Stroke	88 × 90mm								
Displacement	1.642L								
Continuous Rated Output	min^{-1}	1500	1800						
	kW	12.3	14.8						
	PS	16.7	20.1						
Max. Rated Output (Net)	min^{-1}	1500	1800	2000	2200	2400	2600	2800	3000
	kW	13.5	16.3	18.0	19.9	21.6	23.5	25.2	27.1
	PS	18.4	22.1	24.5	27.0	29.4	31.9	34.2	36.8
High Idling	min^{-1}	1600 ± 25	1895 ± 25	2180 ± 25	2400 ± 25	2590 ± 25	2810 ± 25	2995 ± 25	3210 ± 25
Engine Weight (Dry) *with Flywheel Housing	161kg			155kg					
PTO Position	Flywheel End								
Direction of Rotation	Counterclockwise Viewed From Flywheel End								
Cooling System	Liquid-Cooled with Radiator								
Lubricating System	Forced Lubrication with Trochoid Pump								
Normal Oil Pressure at Rated Engine Speed	0.34 - 0.49 MPa			0.39 - 0.54 MPa					
Normal Oil Pressure at Low Idle Speed	0.06 MPa								
Starting System	Electric Starting (Starter Motor: DC12V (1.2 kW)) ***								
	Alternator: DC12V, 40A***								
	Recommended Battery Capacity: 12V, 55Ah *** (5h rating)								
Dimensions (L × W × H)*	589 × 486 × 622mm			564 × 486 × 622mm					
Engine Oil Pan Capacity**	6.7/3.9L (Dipstick Upper Limit / Lower Limit)								
Engine Coolant Capacity	2.0L Engine Only								
Standard Cooling Fan	335mm O.D., 6 Blade Pusher-Type ***								
Crank V-pulley dia./ Fan V-pulley dia.	ϕ120/ ϕ90mm ***			ϕ110/ ϕ110mm ***					

* *Engine specifications without radiator.*

** *Engine oil capacity for a "Deep Standard" oil pan. Refer to the operation manual provided by the driven machine manufacturer for the actual engine oil capacity of your machine.*

*** *May vary depending on application.*

4TNV84 (~ EPA Tier2)

Engine Model	4TNV84								
Version	CL			VM					
Type	Vertical In-line Diesel Engine								
Combustion System	Direct Injection								
Aspiration	Natural								
No. of Cylinders	4								
Bore × Stroke	84 × 90mm								
Displacement	1.995L								
Continuous Rated Output	min^{-1}	1500	1800						
	kW	14.9	17.7						
	PS	20.3	24.1						
Max. Rated Output (Net)	min^{-1}	1500	1800	2000	2200	2400	2600	2800	3000
	kW	16.4	19.5	21.9	24.1	26.3	28.5	30.7	32.9
	PS	22.3	26.5	29.8	32.8	35.8	38.7	41.7	44.7
High Idling	min^{-1}	1600 ± 25	1895 ± 25	2180 ± 25	2400 ± 25	2590 ± 25	2810 ± 25	2995 ± 25	3210 ± 25
Engine Weight (Dry) *with Flywheel Housing	183kg			170kg					
PTO Position	Flywheel End								
Direction of Rotation	Counterclockwise Viewed From Flywheel End								
Cooling System	Liquid-Cooled with Radiator								
Lubricating System	Forced Lubrication with Trochoid Pump								
Normal Oil Pressure at Rated Engine Speed	0.34 - 0.49 MPa			0.39 - 0.54 MPa					
Normal Oil Pressure at Low Idle Speed	0.06 MPa								
Starting System	Electric Starting (Starter Motor: DC12V (1.4 kW)) ***								
	Alternator: DC12V, 40A***								
	Recommended Battery Capacity: 12V, 64Ah*** (5h rating)								
Dimensions (L × W × H)*	683 × 498.5 × 617 mm			658 × 498.5 × 617mm					
Engine Oil Pan Capacity**	7.4/4.0L (Dipstick Upper Limit / Lower Limit)								
Engine Coolant Capacity	2.7L Engine Only								
Standard Cooling Fan	370mm O.D., 6 Blade Pusher-Type ***								
Crank V-pulley dia./ Fan V-pulley dia.	ϕ120/ ϕ90mm ***			ϕ110/ ϕ110mm ***					

* *Engine specifications without radiator.*

** *Engine oil capacity for a "Deep Standard" oil pan. Refer to the operation manual provided by the driven machine manufacturer for the actual engine oil capacity of your machine.*

*** *May vary depending on application.*

4TNV84T (~ EPA Tier2)

Engine Model	4TNV84T								
Version	CL			VM					
Type	Vertical In-line Diesel Engine								
Combustion System	Direct Injection								
Aspiration	Turbocharged								
No. of Cylinders	4								
Bore × Stroke	84 × 90mm								
Displacement	1.995L								
Continuous Rated Output	min^{-1}	1500	1800						
	kW	19.1	24.3						
	PS	26.0	33.0						
Max. Rated Output (Net)	min^{-1}	1500	1800	2000	2200	2400	2600	2800	3000
	kW	21.3	26.9	27.9	30.5	33.5	35.7	38.6	41.2
	PS	29.0	36.5	38.0	41.5	45.5	48.5	52.5	56.0
High Idling	min^{-1}	1600 ± 25	1895 ± 25	2180 ± 25	2400 ± 25	2590 ± 25	2810 ± 25	2995 ± 25	3210 ± 25
Engine Weight (Dry) *with Flywheel Housing	183 kg			170 kg					
PTO Position	Flywheel End								
Direction of Rotation	Counterclockwise Viewed From Flywheel End								
Cooling System	Liquid-Cooled with Radiator								
Lubricating System	Forced Lubrication with Trochoid Pump								
Normal Oil Pressure at Rated Engine Speed	0.29 - 0.44 MPa			0.36 - 0.5 MPa					
Normal Oil Pressure at Low Idle Speed	0.06 MPa								
Starting System	Electric Starting (Starter Motor: DC12V (1.4 kW)) ***								
	Alternator: DC12V, 40A***								
	Recommended Battery Capacity: 12V, 64 Ah*** (5h rating)								
Dimensions (L × W × H)*	683 × 498.5 × 713 mm			649 × 498.5 × 713 mm					
Engine Oil Pan Capacity**	7.4/4.0L (Dipstick Upper Limit / Lower Limit)								
Engine Coolant Capacity	2.7L Engine Only								
Standard Cooling Fan	370mm O.D., 6 Blade Pusher-Type ***								
Crank V-pulley dia./ Fan V-pulley dia.	ϕ120/ ϕ90mm ***			ϕ110/ ϕ110mm ***					

* *Engine specifications without radiator.*

** *Engine oil capacity for a "Deep Standard" oil pan. Refer to the operation manual provided by the driven machine manufacturer for the actual engine oil capacity of your machine.*

*** *May vary depending on application.*

4TNV88 (~ EPA Tier2)

Engine Model	4TNV88								
Version	CL			VM					
Type	Vertical In-line Diesel Engine								
Combustion System	Direct Injection								
Aspiration	Natural								
No. of Cylinders	4								
Bore × Stroke	88 × 90mm								
Displacement	2.190L								
Continuous Rated Output	min^{-1}	1500	1800						
	kW	16.4	19.6						
	PS	22.3	26.7						
Max. Rated Output (Net)	min^{-1}	1500	1800	2000	2200	2400	2600	2800	3000
	kW	18.0	21.6	24.1	26.5	28.8	31.3	33.7	35.4
	PS	24.5	29.4	32.7	36.0	39.2	42.5	45.8	48.1
High Idling	min^{-1}	1600 ± 25	1895 ± 25	2180 ± 25	2400 ± 25	2590 ± 25	2810 ± 25	2995 ± 25	3210 ± 25
Engine Weight (Dry) *with Flywheel Housing	183 kg			170 kg					
PTO Position	Flywheel End								
Direction of Rotation	Counterclockwise Viewed From Flywheel End								
Cooling System	Liquid-Cooled with Radiator								
Lubricating System	Forced Lubrication with Trochoid Pump								
Normal Oil Pressure at Rated Engine Speed	0.34 - 0.49 MPa			0.39 - 0.54 MPa					
Normal Oil Pressure at Low Idle Speed	0.06 MPa								
Starting System	Electric Starting (Starter Motor: DC12V (1.4 kW)) ***								
	Alternator: DC12V, 40A***								
	Recommended Battery Capacity: 12V, 64 Ah*** (5h rating) ***								
Dimensions (L × W × H)*	683 × 498.5 × 618 mm			658 × 498.5 × 618 mm					
Engine Oil Pan Capacity**	7.4 / 4.0 L (Dipstick Upper Limit / Lower Limit)								
Engine Coolant Capacity	2.7L Engine Only								
Standard Cooling Fan	370mm O.D., 6 Blade Pusher-Type ***								
Crank V-pulley dia./ Fan V-pulley dia.	ϕ120/ ϕ90mm ***			ϕ110/ ϕ110mm ***					

* *Engine specifications without radiator.*

** *Engine oil capacity for a "Deep Standard" oil pan. Refer to the operation manual provided by the driven machine manufacturer for the actual engine oil capacity of your machine.*

*** *May vary depending on application.*

4TNV94L (~ EPA Tier2)

Engine Model	4TNV94L						
Version	CL			VM			
Type	Vertical In-line Diesel Engine						
Combustion System	Direct Injection						
Aspiration	Natural						
No. of Cylinders	4						
Bore × Stroke	94 × 110mm						
Displacement	3.054L						
Continuous Rated Output	min^{-1}	1500	1800				
	kW	26.1	31.3				
	PS	35.5	42.5				
Max. Rated Output (Net)	min^{-1}	1500	1800	2000	2200	2400	2500
	kW	29.1	34.6	35.3	38.2	41.6	43.0
	PS	39.5	47.0	48.0	52.0	56.5	58.5
High Idling	min^{-1}	1600 ± 25	1895 ± 25	2180 ± 25	2400 ± 25	2590 ± 25	2700 ± 25
Engine Weight (Dry) *with Flywheel Housing	245 kg			235 kg			
PTO Position	Flywheel End						
Direction of Rotation	Counterclockwise Viewed From Flywheel End						
Cooling System	Liquid-Cooled with Radiator						
Lubricating System	Forced Lubrication with Trochoid Pump						
Normal Oil Pressure at Rated Engine Speed	0.29 - 0.39 MPa						
Normal Oil Pressure at Low Idle Speed	0.06 MPa						
Starting System	Electric Starting (Starter Motor: DC12V (2.3 kW)) ***						
	Alternator: DC12V, 40A***						
	Recommended Battery Capacity: 12V, 64Ah*** (5h rating)						
Dimensions (L × W × H)*	719 × 498 × 742 mm						
Engine Oil Pan Capacity**	10.5/6.0L (Dipstick Upper Limit / Lower Limit)						
Engine Coolant Capacity	4.2L Engine Only						
Standard Cooling Fan	410mm O.D., 6 Blade Pusher-Type ***						
Crank V-pulley dia./ Fan V-pulley dia.	ϕ130/ ϕ130mm ***						

* *Engine specifications without radiator.*

** *Engine oil capacity for a "Deep Standard" oil pan. Refer to the operation manual provided by the driven machine manufacturer for the actual engine oil capacity of your machine.*

*** *May vary depending on application.*

4TNV98 (~ EPA Tier2)

Engine Model	4TNV98						
Version	CL			VM			
Type	Vertical In-line Diesel Engine						
Combustion System	Direct Injection						
Aspiration	Natural						
No. of Cylinders	4						
Bore × Stroke	98 × 110mm						
Displacement	3.319L						
Continuous Rated Output	min^{-1}	1500	1800				
	kW	30.9	36.8				
	PS	42.0	50.0				
Max. Rated Output (Net)	min^{-1}	1500	1800	2000	2200	2400	2500
	kW	34.6	41.2	41.9	45.6	49.3	51.1
	PS	47.0	56.0	57.0	62.0	67.0	69.5
High Idling	min^{-1}	1600 ± 25	1895 ±25	2180 ± 25	2400 ± 25	2590 ± 25	2700 ± 25
Engine Weight (Dry) *with Flywheel Housing	248 kg			235 kg			
PTO Position	Flywheel End						
Direction of Rotation	Counterclockwise Viewed From Flywheel End						
Cooling System	Liquid-Cooled with Radiator						
Lubricating System	Forced Lubrication with Trochoid Pump						
Normal Oil Pressure at Rated Engine Speed	0.29 - 0.39 MPa						
Normal Oil Pressure at Low Idle Speed	0.06 MPa						
Starting System	Electric Starting (Starter Motor: DC12V (2.3 kW)) ***						
	Alternator: DC12V, 40A***						
	Recommended Battery Capacity: 12V, 64Ah*** (5h rating)						
Dimensions (L × W × H)*	719 × 498 × 742 mm						
Engine Oil Pan Capacity**	10.5/6.0L (Dipstick Upper Limit / Lower Limit)						
Engine Coolant Capacity	4.2L Engine Only						
Standard Cooling Fan	410mm O.D., 6 Blade Pusher-Type ***						
Crank V-pulley dia./ Fan V-pulley dia.	ϕ130/ ϕ130mm ***						

* *Engine specifications without radiator.*

** *Engine oil capacity for a "Deep Standard" oil pan. Refer to the operation manual provided by the driven machine manufacturer for the actual engine oil capacity of your machine.*

*** *May vary depending on application.*

4TNV98T (~ EPA Tier2)

Engine Model	4TNV98T						
Version	CL			VM			
Type	Vertical In-line Diesel Engine						
Combustion System	Direct Injection						
Aspiration	Turbocharged						
No. of Cylinders	4						
Bore × Stroke	98 × 110mm						
Displacement	3.319L						
Continuous Rated Output	min^{-1}	1500	1800				
	kW	37.9	45.6				
	PS	51.5	62.0				
Max. Rated Output (Net)	min^{-1}	1500	1800	2000	2200	2400	2500
	kW	41.9	50.4	50.7	55.5	60.3	62.5
	PS	57.0	68.5	69.0	75.5	82.0	85.0
High Idling	min^{-1}	1600 ± 25	1895 ± 25	2180 ± 25	2400 ± 25	2590 ± 25	2700 ± 25
Engine Weight (Dry) *with Flywheel Housing	258 kg			245 kg			
PTO Position	Flywheel End						
Direction of Rotation	Counterclockwise Viewed From Flywheel End						
Cooling System	Liquid-Cooled with Radiator						
Lubricating System	Forced Lubrication with Trochoid Pump						
Normal Oil Pressure at Rated Engine Speed	0.29 - 0.39 MPa						
Normal Oil Pressure at Low Idle Speed	0.06 MPa						
Starting System	Electric Starting (Starter Motor: DC12V (2.3 kW)) ***						
	Alternator: DC12V, 40A***						
	Recommended Battery Capacity: 12V, 64Ah ***						
Dimensions (L × W × H)*	719 × 575 × 804mm						
Engine Oil Pan Capacity**	10.5/6.0L (Dipstick Upper Limit / Lower Limit)						
Engine Coolant Capacity	4.2L Engine Only						
Standard Cooling Fan	430mm O.D., 8 Blade Suction-Type ***						
Crank V-pulley dia./ Fan V-pulley dia.	ϕ130/ ϕ130mm ***						

* *Engine specifications without radiator.*

** *Engine oil capacity for a "Deep Standard" oil pan. Refer to the operation manual provided by the driven machine manufacturer for the actual engine oil capacity of your machine.*

*** *May vary depending on application.*

4TNV106 (~ EPA Tier2)

Engine Model	4TNV106						
Version	CL			VM			
Type	Vertical In-line Diesel Engine						
Combustion System	Direct Injection						
Aspiration	Natural						
No. of Cylinders	4						
Bore × Stroke	106 × 125mm						
Displacement	4.412L						
Continuous Rated Output	min^{-1}	1500	1800				
	kW	41.2	49.3				
	PS	56.0	67.0				
Max. Rated Output (Net)	min^{-1}	1500	1800	2000	2200	2400	2500
	kW	45.6	54.4	56.6	61.4	65.5	67.7
	PS	62.0	74.0	77.0	83.5	89.0	92.0
High Idling	min^{-1}	1600 ± 25	1895 ± 25	2205 ± 25	2420 ± 25	2615 ± 25	2725 ± 25
Engine Weight (Dry) *with Flywheel Housing	345kg			330kg			
PTO Position	Flywheel End						
Direction of Rotation	Counterclockwise Viewed From Flywheel End						
Cooling System	Liquid-Cooled with Radiator						
Lubricating System	Forced Lubrication with Trochoid Pump						
Normal Oil Pressure at Rated Engine Speed	0.31 - 0.49 MPa			With balancer: 0.34-0.44 MPa Without balancer: 0.39-0.49 MPa			
Normal Oil Pressure at Low Idle Speed	0.06 MPa						
Starting System	Electric Starting (Starter Motor: DC12V (3.0 kW)) ***						
	Alternator: DC12V, 55A***						
	Recommended Battery Capacity: 12V, 88 Ah***						
Dimensions (L × W × H)*	808 × 629 × 803 mm			776 × 629 × 803 mm			
Engine Oil Pan Capacity**	14.0/5.0L (Dipstick Upper Limit / Lower Limit)			14.0/6.5L (Dipstick Upper Limit / Lower Limit)			
Engine Coolant Capacity	6L Engine Only						
Standard Cooling Fan	500mm O.D. 7 Blade Pusher-Type ***			500mm O.D. 7 Blade Suction-Type ***			
Crank V-pulley dia./ Fan V-pulley dia.	ϕ150/ ϕ150mm ***						

* *Engine specifications without radiator.*

** *Engine oil capacity for a "Deep Standard" oil pan. Refer to the operation manual provided by the driven machine manufacturer for the actual engine oil capacity of your machine.*

*** *May vary depending on application.*

4TNV106T (~ EPA Tier2)

Engine Model	4TNV106T				
Version	CL			VM	
Type	Vertical In-line Diesel Engine				
Combustion System	Direct Injection				
Aspiration	Turbocharged				
No. of Cylinders	4				
Bore × Stroke	106 × 125mm				
Displacement	4.412L				
Continuous Rated Output	min^{-1}	1500	1800		
	kW	51.5	61.8		
	PS	70.0	84.0		
Max. Rated Output (Net)	min^{-1}	1500	1800	2000	2200
	kW	56.8	68.0	69.9	72.0
	PS	77.2	92.5	95.0	97.9
High Idling	min^{-1}	1600 ± 25	1875 ± 25	2205 ± 25	2420 ± 25
Engine Weight (Dry) *with Flywheel Housing	355 kg			340 kg	
PTO Position	Flywheel End				
Direction of Rotation	Counterclockwise Viewed From Flywheel End				
Cooling System	Liquid-Cooled with Radiator				
Lubricating System	Forced Lubrication with Trochoid Pump				
Normal Oil Pressure at Rated Engine Speed	0.31 - 0.49 MPa			With balancer: 0.34-0.44 MPa Without balancer: 0.39-0.49 MPa	
Normal Oil Pressure at Low Idle Speed	0.06 MPa				
Starting System	Electric Starting (Starter Motor DC12V (3.0 kW)) ***				
	Alternator: DC12V, 55A***				
	Recommended Battery Capacity: 12V, 88 Ah***				
Dimensions (L × W × H)*	808 × 629 × 866 mm			776 × 629 × 866 mm	
Engine Oil Pan Capacity**	14.0/5.0L (Dipstick Upper Limit / Lower Limit)			14.0/6.5L (Dipstick Upper Limit / Lower Limit)	
Engine Coolant Capacity	6L Engine Only				
Standard Cooling Fan	500mm O.D. 7 Blade Pusher-Type ***			500mm O.D.7 Blade Suction-Type***	
Crank V-pulley dia./ Fan V-pulley dia.	ϕ150/ ϕ150mm ***				

* *Engine specifications without radiator.*

** *Engine oil capacity for a "Deep Standard" oil pan. Refer to the operation manual provided by the driven machine manufacturer for the actual engine oil capacity of your machine.*

*** *May vary depending on application.*

3TNV82A-B (complies with EPA Interim Tier4)

Engine Model		3TNV82A-B												
Version		CL		VM										
Type		Vertical, 4-cycle water-cooled diesel engine												
Combustion System		Direct Injection												
Aspiration		Natural aspiration												
No. of Cylinders		3												
Bore × Stroke		ϕ82 × 84mm												
Displacement		1.331L												
Continuous Rated Output	min^{-1}													
	kW													
	PS													
Max. Rated Output (Net)	min^{-1}					2200	2300	2400	2500	2600	2700	2800		3000
	kW					16.0	16.8	17.5	18.2	19.0	19.7	20.4		21.9
	PS					21.8	22.8	23.8	24.8	25.8	26.8	27.8		29.8
														23.0
High Idling	min^{-1}					2375 ±25	2485 ±25	2570 ±25	2675 ±25	2780 ±25	2890 ±25	2995 ±25		3180 ±25
Engine Weight (dry) *with Flywheel Housing				128kg										
PTO Position		Flywheel End												
Direction of Rotation		Counterclockwise Viewed From Flywheel End												
Governor		Mechanical governor (All-speed governor)												
Cooling System		Liquid-Cooled with Radiator												
Lubricating System		Forced Lubrication with Trochoid Pump												
Normal Oil Pressure	Rated Engine Speed			0.31-0.46 (3.2-4.7) MPa										0.36-0.51 (3.7-5.2) MPa
	Low Idle Speed	≥ 0.06 (≥ 0.6) MPa												
Starting System		Electric Starting (Starter Motor: DC12V (1.7kW)) ***												
Charging system		Alternator (DC12V/40A) ***												
Recommended Battery Capacity		12V-55Ah*** (5h rating)												
Starting aid device		Super-quick Heating Glow plug												
Dimensions (L × W × H)*				546 × 492 × 561mm										
Engine Oil Pan Capacity**		5.5L/3.6L (Dipstick Upper Limit / Lower Limit)												
Engine Coolant Capacity		1.8L Engine Only												
Standard Cooling Fan		Resin F type pusher fan - ϕ335(NF) x 6												
Crank V-pulley dia./ Fan V-pulley dia.				ϕ110/ ϕ110mm										

* *Engine specifications without radiator.*

** *Engine oil capacity for a "Deep Standard" oil pan. Refer to the operation manual provided by the driven machine manufacturer for the actual engine oil capacity of your machine.*

*** *May vary depending on application.*

3TNV84T-B (complies with EPA Interim Tier4)

Engine Model		3TNV84T-B												
Version		CL		VM										
Type		Vertical, 4-cycle water-cooled diesel engine												
Combustion System		Direct Injection												
Aspiration		Turbocharged												
No. of Cylinders		3												
Bore × Stroke		ϕ84 × 90mm												
Displacement		1.496L												
Continuous Rated Output	min^{-1}													
	kW													
	PS													
Max. Rated Output (Net)	min^{-1}							2400	2500	2600	2700	2800		
	kW							25.0	26.0	26.8	27.9	29.1		
	PS							34.0	35.3	36.5	38.0	39.5		
High Idling	min^{-1}							2590 ±25	2700 ±25	2810 ±25	2920 ±25	2995 ±25		
Engine Weight (dry) *with Flywheel Housing				155kg										
PTO Position		Flywheel End												
Direction of Rotation		Counterclockwise Viewed From Flywheel End												
Governor		Electronic governor (All-speed governor)												
Cooling System		Liquid-Cooled with Radiator												
Lubricating System		Forced Lubrication with Trochoid Pump												
Normal Oil Pressure	Rated Engine Speed							0.34-0.49 (3.5-5.0) MPa				0.39-0.54 (4.0-5.5) MPa		
	Low Idle Speed	≥ 0.06 (≥ 0.6) MPa												
Starting System		Electric Starting (Starter Motor: DC12V (1.7kW)) ***												
Charging system		Alternator (DC12V/40A) ***												
Recommended Battery Capacity		12V-55Ah*** (5h rating)												
Starting aid device		Air heater (12V DC 400W)												
Dimensions (L × W × H)*		589 × 486 × 622mm		564 × 486 × 622mm										
Engine Oil Pan Capacity**		6.7L/3.9L (Dipstick Upper Limit / Lower Limit)												
Engine Coolant Capacity		2.0L Engine Only												
Standard Cooling Fan				Resin F type pusher fan - ϕ350(QF) x 6										
Crank V-pulley dia./ Fan V-pulley dia.				ϕ110/ ϕ110mm										

* *Engine specifications without radiator.*

** *Engine oil capacity for a "Deep Standard" oil pan. Refer to the operation manual provided by the driven machine manufacturer for the actual engine oil capacity of your machine.*

*** *May vary depending on application.*

3TNV88-U (complies with EPA Interim Tier4)

Engine Model		3TNV88-U												
Version		CL		VM										
Type		Vertical, 4-cycle water-cooled diesel engine												
Combustion System		Direct Injection												
Aspiration		Natural aspiration												
No. of Cylinders		3												
Bore × Stroke		ϕ88 × 90mm												
Displacement		1.642L												
Continuous Rated Output	min^{-1}													
	kW													
	PS													
Max. Rated Output (Net)	min^{-1}					2200	2300	2400	2500	2600	2700	2800		3000
	kW					18.1	18.9	19.7	20.5	21.3	22.2	23.0		24.6
	PS					24.6	25.7	26.8	27.9	29.0	30.2	31.3		33.5
High Idling	min^{-1}					2400 ±25	2510 ±25	2590 ±25	2700 ±25	2810 ±25	2920 ±25	2995 ±25		3210 ±25
Engine Weight (dry) *with Flywheel Housing		155kg												
PTO Position		Flywheel End												
Direction of Rotation		Counterclockwise Viewed From Flywheel End												
Governor		Mechanical governor (All-speed governor)												
Cooling System		Liquid-Cooled with Radiator												
Lubricating System		Forced Lubrication with Trochoid Pump												
Normal Oil Pressure	Rated Engine Speed			0.34-0.49 (3.5-5.0) MPa										0.39-0.54 (4.0-5.5) MPa
	Low Idle Speed	≥ 0.06 (≥ 0.6) MPa												
Starting System		Electric Starting (Starter Motor: DC12V (1.7kW)) ***												
Charging system		Alternator (DC12V/40A) ***												
Recommended Battery Capacity		12V-55Ah*** (5h rating)												
Starting aid device		Super-quick Heating Glow plug												
Dimensions (L × W × H)*				568 × 514 × 622mm										
Engine Oil Pan Capacity**		6.7L/3.9L (Dipstick Upper Limit / Lower Limit)												
Engine Coolant Capacity		2.0L Engine Only												
Standard Cooling Fan		Resin F type pusher fan - ϕ335(NF) x 6												
Crank V-pulley dia./ Fan V-pulley dia.				ϕ110/ ϕ110mm										

* *Engine specifications without radiator.*

** *Engine oil capacity for a "Deep Standard" oil pan. Refer to the operation manual provided by the driven machine manufacturer for the actual engine oil capacity of your machine.*

*** *May vary depending on application.*

3TNV88-B (complies with EPA Interim Tier4)

Engine Model		3TNV88-B												
Version		CL		VM										
Type		Vertical, 4-cycle water-cooled diesel engine												
Combustion System		Direct Injection												
Aspiration		Natural aspiration												
No. of Cylinders		3												
Bore × Stroke		ϕ88 × 90mm												
Displacement		1.642L												
Continuous Rated Output	min^{-1}	1500	1800											
	kW	12.3	14.8											
	PS	16.7	20.1											
Max. Rated Output (Net)	min^{-1}	1500	1800			2200	2300	2400	2500	2600	2700	2800		3000
	kW	13.5	16.3			19.9	20.7	21.6	22.6	23.5	24.3	25.2		27.1
	PS	18.4	22.1			27.0	28.2	29.4	30.7	31.9	33.1	34.2		36.8
High Idling	min^{-1}	1600 ±25	1895 ±25			2400 ±25	2510 ±25	2590 ±25	2700 ±25	2810 ±25	2920 ±25	2995 ±25		3210 ±25
Engine Weight (dry) *with Flywheel Housing		161kg		155kg										
PTO Position		Flywheel End												
Direction of Rotation		Counterclockwise Viewed From Flywheel End												
Governor		Mechanical governor (All-speed governor)												
Cooling System		Liquid-Cooled with Radiator												
Lubricating System		Forced Lubrication with Trochoid Pump												
Normal Oil Pressure	Rated Engine Speed	0.29-0.44 (3.0-4.5) MPa		0.34-0.49 (3.5-5.0) MPa										0.39-0.54 (4.0-5.5) MPa
	Low Idle Speed	≥ 0.06 (≥ 0.6) MPa												
Starting System		Electric Starting (Starter Motor: DC12V (1.7kW)) ***												
Charging system		Alternator (DC12V/40A) ***												
Recommended Battery Capacity		12V-55Ah*** (5h rating)												
Starting aid device		Super-quick Heating Glow plug												
Dimensions (L × W × H)*		583 × 514 × 622mm		568 × 514 × 622mm										
Engine Oil Pan Capacity**		6.7L/3.9L (Dipstick Upper Limit / Lower Limit)												
Engine Coolant Capacity		2.0L Engine Only												
Standard Cooling Fan		Resin F type pusher fan - ϕ335(NF) x 6												
Crank V-pulley dia./ Fan V-pulley dia.		ϕ120/ ϕ90mm		ϕ110/ ϕ110mm										

* *Engine specifications without radiator.*

** *Engine oil capacity for a "Deep Standard" oil pan. Refer to the operation manual provided by the driven machine manufacturer for the actual engine oil capacity of your machine.*

*** *May vary depending on application.*

4TNV84T-Z (complies with EPA Interim Tier4)

Engine Model		4TNV84T-Z												
Version		CL		VM										
Type		Vertical, 4-cycle water-cooled diesel engine												
Combustion System		Direct Injection												
Aspiration		Turbocharged												
No. of Cylinders		4												
Bore × Stroke		ϕ84 × 90mm												
Displacement		1.995L												
Continuous Rated Output	min^{-1}	1500	1800											
	kW	19.1	24.3											
	PS	26.0	33.0											
Max. Rated Output (Net)	min^{-1}	1500	1800					2400	2500		2700	2800		3000
	kW	21.3	26.9					33.5	34.5		37.1	38.6		41.2
	PS	29.0	36.5					45.5	47.0		50.5	52.5		56.0
High Idling	min^{-1}	1600 ±25	1895 ±25					2590 ±25	2700 ±25		2850 ±25	2950 ±25		3150 ±25
Engine Weight (dry) *with Flywheel Housing		183kg		170kg										
PTO Position		Flywheel End												
Direction of Rotation		Counterclockwise Viewed From Flywheel End												
Governor		Electronic governor (All-speed governor)												
Cooling System		Liquid-Cooled with Radiator												
Lubricating System		Forced Lubrication with Trochoid Pump												
Normal Oil Pressure	Rated Engine Speed	0.29-0.44 (3.0-4.5) MPa		0.36-0.51 (3.7-5.2) MPa										
	Low Idle Speed	≥ 0.06 (≥ 0.6) MPa												
Starting System		Electric Starting (Starter Motor: DC12V (1.7kW) ***												
Charging system		Alternator (DC12V/40A) ***												
Recommended Battery Capacity		12V-64Ah*** (5h rating)												
Starting aid device		Air heater (12V DC 400W)												
Dimensions (L × W × H)*		683 × 499 × 713mm		649 × 499 × 713mm										
Engine Oil Pan Capacity**		7.4L/4.0L (Dipstick Upper Limit / Lower Limit)												
Engine Coolant Capacity		2.7L Engine Only												
Standard Cooling Fan		Resin F type pusher fan - ϕ370(EF) x 6												
Crank V-pulley dia./ Fan V-pulley dia.		ϕ120/ ϕ90mm		ϕ110/ ϕ110mm										

* *Engine specifications without radiator.*

** *Engine oil capacity for a "Deep Standard" oil pan. Refer to the operation manual provided by the driven machine manufacturer for the actual engine oil capacity of your machine.*

*** *May vary depending on application.*

4TNV88-U (complies with EPA Interim Tier4)

Engine Model		4TNV88-U												
Version		CL		VM										
Type		Vertical, 4-cycle water-cooled diesel engine												
Combustion System		Direct Injection												
Aspiration		Natural aspiration												
No. of Cylinders		4												
Bore × Stroke		ϕ88 × 90mm												
Displacement		2.190L												
Continuous Rated Output	min^{-1}													
	kW													
	PS													
Max. Rated Output (Net)	min^{-1}										2700	2800		
	kW										29.6	30.7		
	PS										(40.2)	(41.7)		
High Idling	min^{-1}										2920 ±25	2995 ±25		
Engine Weight (dry) *with Flywheel Housing		170kg												
PTO Position		Flywheel End												
Direction of Rotation		Counterclockwise Viewed From Flywheel End												
Governor		Mechanical governor (All-speed governor)												
Cooling System		Liquid-Cooled with Radiator												
Lubricating System		Forced Lubrication with Trochoid Pump												
Normal Oil Pressure	Rated Engine Speed			0.32-0.47 (3.3-4.8) MPa										
	Low Idle Speed	≥ 0.06 (≥ 0.6) MPa												
Starting System		Electric Starting (Starter Motor: DC12V (1.7kW)) ***												
Charging system		Alternator (DC12V/40A) ***												
Recommended Battery Capacity		12V-64Ah*** (5h rating)												
Starting aid device		Super-quick Heating Glow plug												
Dimensions (L × W × H)*		684 × 523 × 617		659 × 523 × 617										
Engine Oil Pan Capacity**		7.4L/4.0L (Dipstick Upper Limit / Lower Limit)												
Engine Coolant Capacity		2.7L Engine Only												
Standard Cooling Fan		Resin F type pusher fan - ϕ370(EF) x 6												
Crank V-pulley dia./ Fan V-pulley dia.		ϕ120/ ϕ90mm		ϕ110/ ϕ110mm										

* *Engine specifications without radiator.*

** *Engine oil capacity for a "Deep Standard" oil pan. Refer to the operation manual provided by the driven machine manufacturer for the actual engine oil capacity of your machine.*

*** *May vary depending on application.*

4TNV88-B (complies with EPA Interim Tier4)

Engine Model		4TNV88-B												
Version		CL		VM										
Type		Vertical, 4-cycle water-cooled diesel engine												
Combustion System		Direct Injection												
Aspiration		Natural aspiration												
No. of Cylinders		4												
Bore × Stroke		ϕ88 × 90mm												
Displacement		2.190L												
Continuous Rated Output	min^{-1}	1500	1800											
	kW	16.4	19.6											
	PS	22.3	26.7											
Max. Rated Output (Net)	min^{-1}	1500	1800	2000	2100	2200	2300	2400	2500	2600	2700	2800		3000
	kW	18.0	21.6	24.1	25.3	26.5	27.7	28.8	30.1	31.3	32.5	33.7		35.4
	PS	24.5	29.4	32.7	34.4	36.0	37.6	39.2	40.9	42.5	44.2	45.8		48.1
High Idling	min^{-1}	1600 ±25	1895 ±25	2180 ±25	2290 ±25	2400 ±25	2510 ±25	2590 ±25	2700 ±25	2810 ±25	2920 ±25	2995 ±25		3210 ±25
Engine Weight (dry) *with Flywheel Housing		183kg		170kg										
PTO Position		Flywheel End												
Direction of Rotation		Counterclockwise Viewed From Flywheel End												
Governor		Mechanical governor (All-speed governor)												
Cooling System		Liquid-Cooled with Radiator												
Lubricating System		Forced Lubrication with Trochoid Pump												
Normal Oil Pressure	Rated Engine Speed	0.29-0.44 (3.0-4.5) MPa		0.32-0.47 (3.3-4.8) MPa										
	Low Idle Speed	≥ 0.06 (≥ 0.6) MPa												
Starting System		Electric Starting (Starter Motor: DC12V (1.7kW)) ***												
Charging system		Alternator (DC12V/40A) ***												
Recommended Battery Capacity		12V-64Ah*** (5h rating)												
Starting aid device		Super-quick Heating Glow plug												
Dimensions (L × W × H)*		684 × 523 × 617		659 × 523 × 617										
Engine Oil Pan Capacity**		7.4L/4.0L (Dipstick Upper Limit / Lower Limit)												
Engine Coolant Capacity		2.7L Engine Only												
Standard Cooling Fan		Resin F type pusher fan - ϕ370(EF) x 6												
Crank V-pulley dia./ Fan V-pulley dia.		ϕ120/ ϕ90		ϕ110/ ϕ110										

* *Engine specifications without radiator.*

** *Engine oil capacity for a "Deep Standard" oil pan. Refer to the operation manual provided by the driven machine manufacturer for the actual engine oil capacity of your machine.*

*** *May vary depending on application.*

4TNV98-E (complies with EPA Interim Tier4)

Engine Model		4TNV98-E							
Version		CL		VM					
Type		Vertical, 4-cycle water-cooled diesel engine							
Combustion System		Direct Injection							
Aspiration		Natural aspiration							
No. of Cylinders		4							
Bore × Stroke		98 × 110mm							
Displacement		3.319L							
Continuous Rated Output	min^{-1}								
	kW								
	PS								
Max. Rated Output (Net)	min^{-1}				2100	2200	2300	2400	2500
	kW				36.8	38.2	39.7	41.6	43.0
	PS				50.0	52.0	54.0	56.5	58.5
High Idling	min^{-1}				2250 ± 25	2350 ± 25	2450 ± 25	2550 ± 25	2650 ± 25
Engine Weight (dry) *with Flywheel Housing				240kg					
PTO Position		Flywheel End							
Direction of Rotation		Counterclockwise Viewed From Flywheel End							
Governor		Electronic governor (All-speed governor)							
Cooling System		Liquid-Cooled with Radiator							
Lubricating System		Forced Lubrication with Trochoid Pump							
Normal Oil Pressure	Rated Engine Speed	0.29-0.39 (3.0-4.0) MPa							
	Low Idle Speed	0.06 (0.6) MPa							
Starting System		Electric Starting (Starter Motor: DC12V (2.3kW)) ***							
Charging system		Alternator (DC12V/40A) ***							
Recommended Battery Capacity		12V-64Ah*** (5h rating)							
Starting aid device		Air heater (12VDC/500W)							
Dimensions (L × W × H)*		719 × 540 × 721mm							
Engine Oil Pan Capacity**		10.2L/5.7L (Dipstick Upper Limit / Lower Limit)							
Engine Coolant Capacity		4.2L Engine Only							
Standard Cooling Fan		Resin F type pusher fan - ϕ410(Al) x 6							
Crank V-pulley dia./ Fan V-pulley dia.		ϕ130/ ϕ130mm							

* *Engine specifications without radiator.*

** *Engine oil capacity for a "Deep Standard" oil pan. Refer to the operation manual provided by the driven machine manufacturer for the actual engine oil capacity of your machine.*

*** *May vary depending on application.*

4TNV98-Z (complies with EPA Interim Tier4)

Engine Model		4TNV98-Z							
Version		CL		VM					
Type		Vertical, 4-cycle water-cooled diesel engine							
Combustion System		Direct Injection							
Aspiration		Natural aspiration							
No. of Cylinders		4							
Bore × Stroke		98 × 110mm							
Displacement		3.319L							
Continuous Rated Output	min^{-1}	1500	1800						
	kW	30.9	36.8						
	PS	42.0	50.0						
Max. Rated Output (Net)	min^{-1}	1500	1800	2000	2100	2200	2300	2400	2500
	kW	34.6	41.2	41.9	43.8	45.6	47.4	49.3	51.1
	PS	47.0	56.0	57.0	59.5	62.0	64.5	67.0	69.5
High Idling	min^{-1}	1530 ± 25	1830 ± 25	2150 ± 25	2250 ± 25	2350 ± 25	2450 ± 25	2550 ± 25	2650 ± 25
Engine Weight (dry) *with Flywheel Housing		248kg		235kg					
PTO Position		Flywheel End							
Direction of Rotation		Counterclockwise Viewed From Flywheel End							
Governor		Electronic governor (All-speed governor)							
Cooling System		Liquid-Cooled with Radiator							
Lubricating System		Forced Lubrication with Trochoid Pump							
Normal Oil Pressure	Rated Engine Speed	0.29-0.39 (3.0-4.0) MPa							
	Low Idle Speed	0.06 (0.6) MPa							
Starting System		Electric Starting (Starter Motor: DC12V (2.3kW)) ***							
Charging system		Alternator (DC12V/40A) ***							
Recommended Battery Capacity		12V-64Ah*** (5h rating)							
Starting aid device		Air heater (12VDC/500W)							
Dimensions (L × W × H)*		719 × 540 × 721mm							
Engine Oil Pan Capacity**		10.2L/5.7L (Dipstick Upper Limit / Lower Limit)							
Engine Coolant Capacity		4.2L Engine Only							
Standard Cooling Fan		Resin F type pusher fan - ϕ410(Al) x 6							
Crank V-pulley dia./ Fan V-pulley dia.		ϕ130/ ϕ130mm							

* *Engine specifications without radiator.*

** *Engine oil capacity for a "Deep Standard" oil pan. Refer to the operation manual provided by the driven machine manufacturer for the actual engine oil capacity of your machine.*

*** *May vary depending on application.*

4TNV98T-Z (complies with EPA Tier3)

Engine Model		4TNV98T-Z							
Version		CL		VM					
Type		Vertical, 4-cycle water-cooled diesel engine							
Combustion System		Direct Injection							
Aspiration		Turbocharged							
No. of Cylinders		4							
Bore × Stroke		98 × 110mm							
Displacement		3.319L							
Continuous Rated Output	min^{-1}	1500	1800						
	kW	37.9	45.6						
	PS	51.5	62.0						
Max. Rated Output (Net)	min^{-1}	1500	1800			2200	2300	2400	2500
	kW	41.9	50.4			55.5	58.0	60.3	62.5
	PS	57.0	68.5			75.5	78.8	82.0	85.0
High Idling	min^{-1}	1530 ± 25	1830 ± 25			2350 ± 25	2450 ± 25	2550 ± 25	2650 ± 25
Engine Weight (dry) *with Flywheel Housing		258kg		245kg					
PTO Position		Flywheel End							
Direction of Rotation		Counterclockwise Viewed From Flywheel End							
Governor		Electronic governor (All-speed governor)							
Cooling System		Liquid-Cooled with Radiator							
Lubricating System		Forced Lubrication with Trochoid Pump							
Normal Oil Pressure	Rated Engine Speed	0.29-0.39 (3.0-4.0) MPa							
	Low Idle Speed	≥ 0.06 (≥ 0.6) MPa							
Starting System		Electric Starting (Starter Motor: DC12V (2.3kW)) ***							
Charging system		Alternator (DC12V/40A) ***							
Recommended Battery Capacity		12V-64Ah*** (5h rating)							
Starting aid device		Air heater (12VDC/500W)							
Engine Oil Pan Capacity**		10.2L/5.7L (Dipstick Upper Limit / Lower Limit)							
Engine Coolant Capacity		4.2L Engine Only							
Standard Cooling Fan		Resin F type pusher fan - ϕ430(UX) x 6							
Crank V-pulley dia./ Fan V-pulley dia.		ϕ130/ ϕ130mm							

* *Engine specifications without radiator.*

** *Engine oil capacity for a "Deep Standard" oil pan. Refer to the operation manual provided by the driven machine manufacturer for the actual engine oil capacity of your machine.*

*** *May vary depending on application.*

ENGINE SERVICE STANDARDS

Inspection Item		Standard	Limit	Reference page
Intake / Exhaust Valve Clearance	All models except 4TNV106 and 4TNV106T	0.006 - 0.010 in. (0.15 - 0.25 mm)	-	*See Measuring and Adjusting Valve Clearance on page 6-66*
	4TNV106 and 4TNV106T	0.010 - 0.014 in. (0.25 - 0.35 mm)	-	
Fuel Injection Timing	*See Checking and Adjusting Fuel Injection Timing on page 7-30.*			
Fuel Injection Pressure	*See Test and Adjustment Specifications on page 7-12.*			
Compression Pressure at 250 rpm (250 min^{-1})	3TNV82A	443 - 473 psi (3.06 - 3.26 MPa; 30 - 32 kgf / cm^2)	340 - 370 psi (2.35 - 3.55 MPa; 24 - 26 kgf / cm^2)	*See Troubleshooting By Measuring Compression Pressure on page 15-4*
	3TNV84, 4TNV84	455 - 485 psi (3.14 - 3.34 MPa; 32 - 34 kgf / cm^2)	355 - 385 psi (2.45 - 2.65 MPa; 25 - 27 kgf / cm^2)	
	3TNV84T, 4TNV84T	411 - 441 psi (2.84 - 3.04 MPa; 29 - 31 kgf / cm)	340 - 370 psi (2.35 - 2.55 MPa; 24 - 26 kgf / cm^2)	
	3TNV88, 4TNV88, 4TNV94L, 4TNV98, 4TNV98T, 4TNV106, 4TNV106T	483 - 513 psi (3.33 - 3.53 MPa; 34 - 36 kgf / cm^2)	384 - 414 psi (2.65 - 2.85 MPa; 27 - 29 kgf / cm^2)	
Deviation Between Cylinders	All Models	29 - 43 psi (0.2 - 0.3 MPa; 2 - 3 kgf/cm^2)	-	-
Oil Pressure Switch Operating Pressure		5.8 - 8.8 psi (0.04 - 0.06 MPa; 0.4 - 0.6 kgf / cm^2)	-	-
Thermostat		Valve Opening Temperature	Full Opening Lift Temperature	*See Thermostat on page 8-11*
	All Models	157°F - 163°F (70°C - 73°C)	0.32 in (8 mm) or above 185°F (85°C)	
	All Models Option	176°F - 183°F (80°C - 84°C)	0.39 in (10 mm) or above 203°F (95°C)	
Coolant Temperature Switch		225°F - 235°F (107°C - 113°C)	-	*See Temperature Switch on page 8-10*

TIGHTENING TORQUES FOR STANDARD BOLTS AND NUTS

Use the correct amount of torque when you tighten the fasteners on the machine. Applying excessive torque may damage the fastener or component and not enough torque may cause a leak or component failure.

CAUTION

The tightening torque in the Standard Torque Chart *(see General Service Information section)* should be applied only to the bolts with a "7" head. (JIS strength classification: 7T)

- **Apply 60% torque to bolts that are not listed.**
- **Apply 80% torque when tightened to aluminum alloy.**

0000023enTNVDISM

Item	Nominal Thread Diameter x Pitch	Tightening Torque	Remarks
Hexagon Bolt (7T) and Nut	M6 x 1.0 mm	7 - 9 ft-lb (87 -104 in.-lb, 9.8 -11.8 N·m, 1.0 -1.2 kgf·m)	Use 80% of the value at left when the tightening part is aluminum. Use 60% of the value at left for 4T bolts and lock nuts.
	M8 x 1.25 mm	17 - 21 ft-lb (200 - 251 in.-lb, 22.6 - 28.4 N·m, 2.3 - 2.9 kgf·m)	
	M10 x 1.5 mm	33 - 40 ft-lb (44.1 - 53.9 N·m, 4.5 - 5.5 kgf·m)	
	M12 x 1.75 mm	58 - 72 ft-lb (78.4 - 98.0 N·m, 8.0 - 10 kgf·m)	
	M14 x 1.5 mm	94 - 108 ft-lb (127.5 - 147.1 N·m, 13 - 15 kgf·m)	
	M16 x 1.5 mm	159 - 174 ft-lb (215.7- 235.4 N·m, 22 - 24 kgf·m)	
PT PLug	1/8 mm	7 ft-lb (87 in.-lb, 9.8 N·m, 1.0 kgf·m)	-
	1/4 mm	14 ft-lb (173 in.-lb, 19.6 N·m, 2.0 kgf·m)	
	3/8 mm	22 ft-lb (29.4 N·m, 3.0 kgf·m)	
	1/2 mm	43 ft-lb (58.8 N·m, 6.0 kgf·m)	

Item	Nominal Thread Diameter x Pitch	Tightening Torque	Remarks
Pipe Joint Bolt	M8	9 - 12 ft-lb (112 - 148 in.-lb, 12.7 - 16.7 N·m, 1.3 - 1.7 kgf·m)	-
	M10	14 - 19 ft-lb (173 - 225 in.-lb, 19.6 - 18.734 N·m, 2.0 - 3.5 kgf·m)	
	M12	18 - 25 ft-lb (24.5 - 34.3 N·m, 2.5 - 3.5 kgf·m)	
	M14	29 - 36 ft-lb (39.2 - 49.0 N·m, 4.0 - 5.0 kgf·m)	
	M16	36 - 43 ft-lb (49.0 - 58.8 N·m, 5.0 - 6.0 kgf·m)	

Note: Torque values shown in this manual are for clean, non-lubricated fasteners unless otherwise specified.

ABBREVIATIONS AND SYMBOLS

Abbreviations

A	ampere
AC	alternating current
ACEA	Association des Constructeurs Européens d'Automobilies
Ah	ampere-hour
API	American Petroleum Institute
ARB	Air Resources Board
ATDC	after top dead center
BDC	bottom dead center
BTDC	before top dead center
°C	degree Celsius
CARB	California Air Resources Board
CCA	cold cranking amp
cfm	cubic feet per minute
cm	centimeter
cm^3	cubic centimeter
cm^3/min	cubic centimeter per minute
cu in.	cubic inch
D	diameter
DC	direct current
DI	direct injection
DVA	direct volt adapter
EPA	Environmental Protection Agency
ESG	electronic speed governor
°F	degree Fahrenheit
fl oz	fluid ounce (U.S.)
fl oz/min	fluid ounce (U.S.) per minute
ft	foot
ft-lb	foot pound
ft-lbf/min	foot pound force per minute
g	gram
gal	gallon (U.S.)
gal/hr	gallon (U.S.) per hour
gal/min	gallon (U.S.) per minute
GL	gear lubricant
hp	horsepower (U.S.)
hr	hour
I.D.	inside diameter
ID	identification
IDI	indirect injection
in.	inch
in.Aq	inches Aqueous (water)
in.Hg	inches Mercury
in.-lb	inch pound
j	joule
JASO	Japanese Automobile Standards Organization
k	kelvin
kg	kilogram
kgf/cm^2	kilogram force per square centimeter
kgf/m	kilogram force per meter
km	kilometers
kPa	kilopascal
kW	kilowatt
L	liter
L/hr	liter per hour
lb	pound
lbf	pound force
m	meter
mL	milliliter
mm	millimeter
mmAq	millimeter Aqueous (water)
MPa	megapascal
mV	millivolt
N	newton
N·m	newton meter
No.	number
O.D.	outside diameter
oz	ounce
Pa	pascal
PS	horsepower (metric)
psi	pound per square inch
qt	quart (U.S.)
R	radius
rpm	revolutions per minute
SAE	Society of Automotive Engineers
sec.	second
t	short ton 2000 lb
TBN	total base number
TDC	top dead center
V	volt
VAC	volt alternating current
VDC	volt direct current
W	watt

Symbols

°	degree
+	plus
-	minus
±	plus or minus
Ω	ohm
μ	micro
%	percent

UNIT CONVERSIONS

Unit Prefixes

Prefix	Symbol	Power
mega	M	x 1,000,000
kilo	k	x 1,000
centi	c	x 0.01
milli	m	x 0.001
micro	μ	x 0.000001

Units of Length

mile	x	1.6090	= km
ft	x	0.3050	= m
in.	x	2.5400	= cm
in.	x	25.4000	= mm
km	x	0.6210	= mile
m	x	3.2810	= ft
cm	x	0.3940	= in.
mm	x	0.0394	= in.

Units of Volume

gal (U.S.)	x	3.78540	= L
qt (U.S.)	x	0.94635	= L
cu in.	x	0.01639	= L
cu in.	x	16.38700	= mL
fl oz (U.S.)	x	0.02957	= L
fl oz (U.S.)	x	29.57000	= mL
cm^3	x	1.00000	= mL
cm^3	x	0.03382	= fl oz (U.S.)

Units of Mass

lb	x	0.45360	= kg
oz	x	28.35000	= g
kg	x	2.20500	= lb
g	x	0.03527	= oz

Units of Force

lbf	x	4.4480	= N
lbf	x	0.4536	= kgf
N	x	0.2248	= lbf
N	x	0.1020	= kgf
kgf	x	2.2050	= lbf
kgf	x	9.8070	= N

Units of Torque

ft-lb	x	1.3558	= N·m
ft-lb	x	0.1383	= kgf/m
in.-lb	x	0.1130	= N·m
in.-lb	x	0.0115	= kgf/m
kgf/m	x	7.2330	= ft-lb
kgf/m	x	86.8000	= in.-lb
kgf/m	x	9.8070	= N·m
N·m	x	0.7376	= ft-lb
N·m	x	8.8510	= in.-lb
N·m	x	0.1020	= kgf/m

Units of Pressure

psi	x	0.0689	= bar
psi	x	6.8950	= kPa
psi	x	0.0703	= kg/cm^2
bar	x	14.5030	= psi
bar	x	100.0000	= kPa
bar	x	29.5300	= inHg (60°F)
kPa	x	0.1450	= psi
kPa	x	0.0100	= bar
kPa	x	0.0102	= kg/cm^2
kg/cm^2	x	98.0700	= psi
kg/cm^2	x	0.9807	= bar
kg/cm^2	x	14.2200	= kPa
in.Hg (60°)	x	0.0333	= bar
in.Hg (60°)	x	3.3770	= kPa
in.Hg (60°)	x	0.0344	= kg/cm^2
mmAq	x	0.0394	= in.Aq

Units of Power

hp (metric or PS)	x	0.9863201	= hp SAE
hp (metric or PS)	x	0.7354988	= kW
hp SAE	x	1.0138697	= hp (metric or PS)
hp SAE	x	0.7456999	= kW
kW	x	1.3596216	= hp (metric or PS)
kW	x	1.3410221	= hp SAE

Units of Temperature

°F = (1.8 x °C) + 32
°C = 0.556 x (°F - 32)

This Page Intentionally Left Blank

Section 5

PERIODIC MAINTENANCE

Page

Before You Begin Servicing 5-3

Introduction 5-16
- The Importance of Periodic Maintenance 5-16
- Performing Periodic Maintenance 5-16
- Yanmar Replacement Parts 5-16
- Required EPA / ARB Maintenance -USA Only 5-16
- EPA / ARB Installation Requirements - USA Only 5-16

Periodic Maintenance Schedule 5-17

Periodic Maintenance Procedures 5-20
- After Initial 50 Hours of Operation 5-20
- Every 50 Hours of Operation 5-24
- Every 250 Hours of Operation 5-27
- Every 500 Hours of Operation 5-32
- Every 1000 Hours of Operation 5-36
- Every 1500 Hours of Operation 5-39
- Every 2000 Hours of Operation 5-42

This Page Intentionally Left Blank

BEFORE YOU BEGIN SERVICING

⚠ DANGER

EXPLOSION HAZARD!

- NEVER check the remaining battery charge by shorting out the terminals. This will result in a spark and may cause an explosion or fire. Use a hydrometer to check the remaining battery charge.
- If the electrolyte is frozen, slowly warm the battery before you recharge it.
- Failure to comply will result in death or serious injury.

0000007en

⚠ DANGER

FIRE AND EXPLOSION HAZARD!

- Only use the key switch to start the engine.
- NEVER jump-start the engine. Sparks caused by shorting the battery to the starter terminals may cause a fire or explosion.
- Failure to comply will result in death or serious injury.

0000004en

⚠ DANGER

SCALD HAZARD!

- NEVER remove the radiator cap if the engine is hot. Steam and hot engine coolant will spurt out and seriously burn you. Allow the engine to cool down before you attempt to remove the radiator cap.
- Tighten the radiator cap securely after you check the radiator. Steam can spurt out during engine operation if the cap is loose.
- ALWAYS check the level of the engine coolant by observing the reserve tank.
- Failure to comply will result in death or serious injury.

0000002en

⚠ DANGER

FIRE AND EXPLOSION HAZARD!

- Diesel fuel is flammable and explosive under certain conditions.
- Only fill the fuel tank with diesel fuel. Filling the fuel tank with gasoline may result in a fire and will damage the engine.
- NEVER refuel with the engine running.
- Wipe up all spills immediately.
- Keep sparks, open flames or any other form of ignition (match, cigarette, static electric source) well away when refueling.
- NEVER overfill the fuel tank.
- Fill the fuel tank. Store any containers containing fuel in a well-ventilated area, away from any combustibles or sources of ignition.
- Failure to comply will result in death or serious injury.

0000005en

⚠ DANGER

FIRE AND EXPLOSION HAZARD!

- Diesel fuel is flammable and explosive under certain conditions.
- Before you operate the engine, check for fuel leaks. Replace rubberized fuel hoses every two years or every 2000 hours of engine operation, whichever comes first, even if the engine has been out of service. Rubberized fuel lines tend to dry out and become brittle after two years or 2000 hours of engine operation, whichever comes first.
- Failure to comply will result in death or serious injury.

0000015en

⚠ DANGER

FIRE AND EXPLOSION HAZARD!

- Diesel fuel is flammable and explosive under certain conditions.
- NEVER remove the fuel cap with the engine running.
- Failure to comply will result in death or serious injury.

0000011en

⚠ DANGER

FIRE AND EXPLOSION HAZARD!

- Diesel fuel is flammable and explosive under certain conditions.
- Be sure to place the diesel fuel container on the ground when transferring the diesel fuel from the pump to the container. Hold the hose nozzle firmly against the side of the container while filling it. This prevents static electricity buildup which could cause sparks and ignite fuel vapors.
- NEVER place diesel fuel or other flammable material such as oil, hay or dried grass close to the engine during engine operation or shortly after shutdown.
- Failure to comply will result in death or serious injury.

0000014en

⚠ DANGER

FIRE AND EXPLOSION HAZARD!

- Diesel fuel is flammable and explosive under certain conditions.
- NEVER use diesel fuel as a cleaning agent.
- Failure to comply will result in death or serious injury.

0000012en

⚠ DANGER

CRUSH HAZARD!

- When you need to transport an engine for repair, have a helper assist you to attach it to a hoist and load it on a truck.
- NEVER stand under a hoisted engine. If the hoist mechanism fails, the engine will fall on you, causing death or serious injury.
- Failure to comply will result in death or serious injury.

0000008en

⚠ DANGER

FIRE AND EXPLOSION HAZARD!

- Diesel fuel is flammable and explosive under certain conditions.
- When you remove any fuel system component to perform maintenance (such as changing the fuel filter) place an approved container under the opening to catch the fuel.
- NEVER use a shop rag to catch the fuel. Vapors from the rag are flammable and explosive.
- Wipe up any spills immediately.
- Wear eye protection. The fuel system is under pressure and fuel could spray out when you remove any fuel system component.
- Failure to comply will result in death or serious injury.

0000009en

⚠ DANGER

FIRE AND EXPLOSION HAZARD!

- Diesel fuel is flammable and explosive under certain conditions.
- Place an approved container under the air bleed port when you prime the fuel system. Never use a shop rag to catch the fuel. Wipe up any spills immediately. ALWAYS close the air bleed port after you complete priming the system.
- Wear eye protection. The fuel system is under pressure and fuel could spray out when you open the air bleed port.
- If the unit has an electric fuel pump, turn the key switch to the ON position for 10 to 15 seconds, or until the fuel coming out of the air bleed port is free of bubbles, to allow the electric fuel pump to prime the system.
- If the unit has a mechanical fuel pump, operate the fuel priming pump several times until the fuel coming out of the air bleed port is free of bubbles.
- Failure to comply will result in death or serious injury.

0000006en

⚠ WARNING

EXHAUST HAZARD!

- NEVER operate the engine in an enclosed area such as a garage, tunnel, underground room, manhole or ship's hold without proper ventilation.
- NEVER block windows, vents, or other means of ventilation if the engine is operating in an enclosed area. All internal combustion engines create carbon monoxide gas during operation. Accumulation of this gas within an enclosure could cause illness or even death.
- Make sure that all connections are tightened to specifications after repair is made to the exhaust system.
- Failure to comply could result in death or serious injury.

0000003en

⚠ WARNING

SEVER HAZARD!

- Keep hands and other body parts away from moving / rotating parts such as the cooling fan, flywheel or PTO shaft.
- Wear tight-fitting clothing and keep your hair short or tie it back while the engine is running.
- Remove all jewelry before you operate or service the machine.
- NEVER start the engine in gear. Sudden movement of the engine and / or machine could cause death or serious personal injury.
- NEVER operate the engine without the guards in place.
- Before you start the engine make sure that all bystanders are clear of the area.
- Keep children and pets away while the engine is operating.
- Check before starting the engine that any tools or shop rags used during maintenance have been removed from the area.
- Failure to comply could result in death or serious injury.

0000002en

⚠ WARNING

SUDDEN MOVEMENT HAZARD!

- Engaging the transmission or PTO at an elevated engine speed could result in unexpected movement of the equipment.
- Failure to comply could result in death or serious injury.

0000006en

⚠ WARNING

BURN HAZARD!

- Keep your hands and other body parts away from hot engine surfaces such as the muffler, exhaust pipe, turbocharger (if equipped) and engine block during operation and shortly after you shut the engine down. These surfaces are extremely hot while the engine is operating and could seriously burn you.
- Failure to comply could result in death or serious injury.

0000015en

⚠ WARNING

ALCOHOL AND DRUG HAZARD!

- NEVER operate the engine while you are under the influence of alcohol or drugs.
- NEVER operate the engine when you are feeling ill.
- Failure to comply could result in death or serious injury.

0000004en

⚠ WARNING

EXPOSURE HAZARD!

- Wear personal protective equipment such as gloves, work shoes, eye and hearing protection as required by the task at hand.
- NEVER wear jewelry, unbuttoned cuffs, ties or loose-fitting clothing when you are working near moving / rotating parts such as the cooling fan, flywheel or PTO shaft.
- ALWAYS tie back long hair when you are working near moving / rotating parts such as a cooling fan, flywheel, or PTO shaft.
- NEVER operate the engine while wearing a headset to listen to music or radio because it will be difficult to hear the alert signals.
- Failure to comply could result in death or serious injury.

0000005en

⚠ WARNING

BURN HAZARD!

- Batteries contain sulfuric acid. NEVER allow battery fluid to come in contact with clothing, skin or eyes. Severe burns could result. ALWAYS wear safety goggles and protective clothing when servicing the battery. If battery fluid contacts the eyes and / or skin, immediately flush the affected area with a large amount of clean water and obtain prompt medical treatment.
- Failure to comply could result in death or serious injury.

0000007en

⚠ WARNING

HIGH-PRESSURE HAZARD!

- Avoid skin contact with the high-pressure diesel fuel spray caused by a fuel system leak such as a broken fuel injection line. High-pressure fuel can penetrate your skin and result in serious injury. If you are exposed to high-pressure fuel spray, obtain prompt medical treatment.
- NEVER check for a fuel leak with your hands. ALWAYS use a piece of wood or cardboard. Have your authorized Yanmar industrial engine dealer or distributor repair the damage.
- Failure to comply could result in death or serious injury.

0000008en

⚠ WARNING

SHOCK HAZARD!

- Turn off the battery switch (if equipped) or disconnect the negative battery cable before servicing the electrical system.
- Check the electrical harnesses for cracks, abrasions, and damaged or corroded connectors. ALWAYS keep the connectors and terminals clean.
- Failure to comply could result in death or serious injury.

0000009en

⚠ WARNING

ENTANGLEMENT HAZARD!

- Stop the engine before you begin to service it.
- NEVER leave the key in the key switch when you are servicing the engine. Someone may accidentally start the engine and not realize you are servicing it. This could result in a serious injury.
- If you must service the engine while it is operating, remove all jewelry, tie back long hair, and keep your hands, other body parts and clothing away from moving / rotating parts.
- Failure to comply could result in death or serious injury.

0000010en

⚠ WARNING

BURN HAZARD!

- If you must drain the engine oil while it is still hot, stay clear of the hot engine oil to avoid being burned.
- ALWAYS wear eye protection.
- Failure to comply could result in death or serious injury.

0000011en

⚠ WARNING

BURN HAZARD!

- Wait until the engine cools before you drain the engine coolant. Hot engine coolant may splash and burn you.
- Failure to comply could result in death or serious injury.

0000016en

⚠ CAUTION

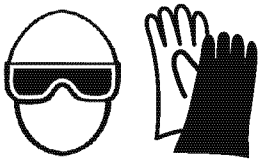

COOLANT HAZARD!

- Wear eye protection and rubber gloves when you handle long life or extended life engine coolant. If contact with the eyes or skin should occur, flush eyes and wash immediately with clean water.
- Failure to comply may result in minor or moderate injury.

0000005en

⚠ CAUTION

FLYING OBJECT HAZARD!

- ALWAYS wear eye protection when servicing the engine and when using compressed air or high-pressure water. Dust, flying debris, compressed air, pressurized water or steam may injure your eyes.
- Failure to comply may result in minor or moderate injury.

0000003en

CAUTION

- Only use diesel fuels recommended by Yanmar for the best engine performance, to prevent engine damage and to comply with EPA / ARB warranty requirements.
- Only use clean diesel fuel.
- NEVER remove the primary strainer (if equipped) from the fuel tank filler port. If removed, dirt and debris could get into the fuel system causing it to clog.

0000004en

CAUTION

- Only use the engine oil specified. Other engine oils may affect warranty coverage, cause internal engine components to seize and / or shorten engine life.
- Prevent dirt and debris from contaminating the engine oil. Carefully clean the oil cap / dipstick and the surrounding area before you remove the cap.
- NEVER mix different types of engine oil. This may adversely affect the lubricating properties of the engine oil.
- NEVER overfill. Overfilling may result in white exhaust smoke, engine overspeed or internal damage.

0000005en

CAUTION

- Only use the engine coolant specified. Other engine coolants may affect warranty coverage, cause an internal buildup of rust and scale and / or shorten engine life.
- Prevent dirt and debris from contaminating the engine coolant. Carefully clean the radiator cap and the surrounding area before you remove the cap.
- NEVER mix different types of engine coolants. This may adversely affect the properties of the engine coolant.

0000006en

CAUTION

- NEVER attempt to modify the engine's design or safety features such as defeating the engine speed limit control or the diesel fuel injection quantity control.
- Modifications may impair the engine's safety and performance characteristics and shorten the engine's life. Any alterations to this engine may void its warranty. Be sure to use Yanmar genuine replacement parts.

0000079en

CAUTION

Observe the following environmental operating conditions to maintain engine performance and avoid premature engine wear:

- Avoid operating in extremely dusty conditions.
- Avoid operating in the presence of chemical gases or fumes.
- Avoid operating in a corrosive atmosphere such as salt water spray.
- NEVER install the engine in a floodplain unless proper precautions are taken to avoid being subject to a flood.
- NEVER expose the engine to the rain.

0000003en

CAUTION

Observe the following environmental operating conditions to maintain engine performance and avoid premature engine wear:

- The standard range of ambient temperatures for the normal operation of Yanmar engines is from +5°F (-15°C) to +113°F (+45°C).
- If the ambient temperature exceeds +113°F (+45°C) the engine may overheat and cause the engine oil to break down.
- If the ambient temperature is below +5°F (-15°C) the engine will be hard to start and the engine oil may not flow easily.
- Contact your authorized Yanmar industrial engine dealer or distributor if the engine will be operated outside of this standard temperature range.

0000065en

CAUTION

NEVER hold the key in the START position for longer than 15 seconds or the starter motor will overheat.

0000007en

CAUTION

For maximum engine life, Yanmar recommends that when shutting the engine down, you allow the engine to idle, without load, for five minutes. This will allow the engine components that operate at high temperatures, such as the turbocharger (if equipped) and exhaust system, to cool slightly before the engine itself is shut down.

0000008en

CAUTION

NEVER use an engine starting aid such as ether. Engine damage will result.

0000009en

CAUTION

Make sure the engine is installed on a level surface. If a continuously running engine is installed at an angle greater than (IDI = 25°, DI = 30°) in any direction or if an engine runs for short periods of time (less than three minutes) at an angle greater than (IDI = 30°, DI = 35°) in any direction, engine oil may enter the combustion chamber causing excessive engine speed and white exhaust smoke. This may cause serious engine damage.

0000010enTNV

CAUTION

New Engine Break-in:

- On the initial engine start-up, allow the engine to idle for approximately 15 minutes while you check for proper engine oil pressure, diesel fuel leaks, engine oil leaks, coolant leaks, and for proper operation of the indicators and / or gauges.
- During the first hour of operation, vary the engine speed and the load on the engine. Short periods of maximum engine speed and load are desirable. Avoid prolonged operation at minimum or maximum engine speeds and loads for the next four to five hours.
- During the break-in period, carefully observe the engine oil pressure and engine temperature.
- During the break-in period, check the engine oil and coolant levels frequently.

0000011en

CAUTION

NEVER engage the starter motor while the engine is running. This may damage the starter motor pinion and / or ring gear.

0000012en

CAUTION

It is important to perform daily checks.

Periodic maintenance prevents unexpected downtime, reduces the number of accidents due to poor machine performance and helps extend the life of the engine.

0000060en

CAUTION

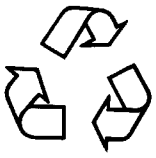

- ALWAYS be environmentally responsible.
- Follow the guidelines of the EPA or other governmental agencies for the proper disposal of hazardous materials such as engine oil, diesel fuel and engine coolant. Consult the local authorities or reclamation facility.
- NEVER dispose of hazardous materials irresponsibly by dumping them into a sewer, on the ground, or into ground water or waterways.
- Failure to follow these procedures may seriously harm the environment.

0000013en

CAUTION

Protect the air cleaner, turbocharger (if equipped) and electric components from damage when you use steam or high-pressure water to clean the engine.

0000014en

CAUTION

- NEVER overfill the engine with engine oil.
- ALWAYS keep the oil level between the upper and lower lines on the oil cap / dipstick.

0000015en

CAUTION

NEVER use high-pressure water or compressed air at greater than 28 psi (193 kPa; 19 686 mmAq) or a wire brush to clean the radiator fins. Radiator fins damage easily.

0000016en

CAUTION

NEVER attempt to adjust the low or high idle speed limit screw. This may impair the safety and performance of the machine and shorten its life. If the idle speed limit screws require adjustment, see your authorized Yanmar industrial engine dealer or distributor.

0000017en

CAUTION

Establish a periodic maintenance plan according to the engine application and make sure you perform the required periodic maintenance at the intervals indicated. Failure to follow these guidelines will impair the engine's safety and performance characteristics, shorten the engine's life and may affect the warranty coverage on your engine.

See Yanmar Limited Warranty in Warranty Section.

Consult your authorized Yanmar dealer or distributor for assistance when checking items marked with a ●.

0000024enTNVDISM

CAUTION

If the fuel filter / water separator is positioned higher than the fuel level in the fuel tank, water may not drip out when the fuel filter / water separator drain cock is opened. If this happens, turn the air vent screw on the top of the fuel filter / water separator 2-3 turns counterclockwise.

Be sure to tighten the air vent screw after the water has drained out.

0000025en

CAUTION

- **When the engine is operated in dusty conditions, clean the air cleaner element more frequently.**
- **NEVER operate the engine with the air cleaner element(s) removed. This may allow foreign material to enter the engine and damage it.**

0000026en

CAUTION

The maximum air intake restriction, in terms of differential pressure measurement, must not exceed 0.90 psi (6.23 kPa; 635 mmAq). Clean or replace the air cleaner element if the air intake restriction exceeds the above mentioned value.

0000046en

INTRODUCTION

This section of the *Service Manual* describes the procedures for proper care and maintenance of the engine.

The Importance of Periodic Maintenance

Engine deterioration and wear occurs in proportion to length of time the engine has been in service and the conditions the engine is subject to during operation. Periodic maintenance prevents unexpected downtime, reduces the number of accidents due to poor machine performance and helps extend the life of the engine.

Performing Periodic Maintenance

⚠ WARNING

EXHAUST HAZARD!

- **NEVER operate the engine in an enclosed area such as a garage, tunnel, underground room, manhole or ship's hold without proper ventilation.**
- **NEVER block windows, vents, or other means of ventilation if the engine is operating in an enclosed area. All internal combustion engines create carbon monoxide gas during operation. Accumulation of this gas within an enclosure could cause illness or even death.**
- **Make sure that all connections are tightened to specifications after repair is made to the exhaust system.**
- **Failure to comply could result in death or serious injury.**

0000003en

Perform periodic maintenance procedures in an open, level area free from traffic. If possible, perform the procedures indoors to prevent environmental conditions, such as rain, wind, or snow, from damaging the machine.

Yanmar Replacement Parts

Yanmar recommends that you use genuine Yanmar parts when replacement parts are needed. Genuine replacement parts help ensure long engine life.

Required EPA / ARB Maintenance - USA Only

To maintain optimum engine performance and compliance with the Environmental Protection Agency (EPA) Regulations Non-road Engines and the California Air Resources Board (ARB, California), it is essential that you follow the *Periodic Maintenance Schedule on page 5-17* and *Periodic Maintenance Procedures on page 5-20*.

EPA / ARB Installation Requirements - USA Only

The following are the installation requirements for the EPA / ARB. Unless these requirements are met, the exhaust gas emissions will not be within the limits specified by the EPA and ARB.

Maximum Exhaust Gas Restriction shall be:

- 3TNV84T, 4TNV84T, 4TNV98T, 4TNV106T: 1.71 psi (11.8kPa, 1200mmAq) or less
- 3TNV82A, 3TNV84, 3TNV88, 4TNV84, 4TNV88, 4TNV94L, 4TNV98, 4TNV106: 2.22 psi (15.3kPa, 1560mmAq) or less
- 4TNV84T-Z, 4TNV98T-Z (With Electronic Control System EGR): 1.49psi (10.3kPa, 1050mmAq) or less
- 4TNV98-Z(E), 4TNV98T-ZCL: 1.94 psi (13.4kPa, 1360mmAq) or less

Maximum air intake restriction shall be 0.90 psi (6.23 kPa; 635 mm Aq) or less. Clean or replace the air cleaner element if the air intake restriction exceeds the above mentioned value.

PERIODIC MAINTENANCE SCHEDULE

Daily and periodic maintenance is important to keep the engine in good operating condition. The following is a summary of maintenance items by periodic maintenance intervals. Periodic maintenance intervals vary depending on engine application, loads, diesel fuel and engine oil used and are hard to establish definitively. The following should be treated only as a general guideline.

CAUTION

Establish a periodic maintenance plan according to the engine application and make sure you perform the required periodic maintenance at the intervals indicated. Failure to follow these guidelines will impair the engine's safety and performance characteristics, shorten the engine's life and may affect the warranty coverage on your engine.

See Yanmar Limited Warranty in Warranty Section.

Consult your authorized Yanmar dealer or distributor for assistance when checking items marked with a ●.

0000024enTNVDISM

○: Check ◇: Replace ●: Contact your authorized Yanmar industrial engine dealer or distributor

System	Check Item	Daily	Periodic Maintenance Interval						
			Every 50 hours	Every 250 hours	Every 500 hours	Every 1000 hours	Every 1500 hours	Every 2000 hours	Every 3000 hours
Cooling System	Check and Refill Engine Coolant	○							
	Check and Clean Radiator Fins		○						
	Check and Adjust Cooling Fan V-belt		○ 1st time	○ 2nd and after					
	Drain, Flush and Refill Cooling System With New Coolant					◇ or every 1 year which-ever comes first			
Cylinder Head	Adjust Intake / Exhaust Valve Clearance					●			
	Lap Intake / Exhaust Valve Seats (if required)							●	
Electrical Equipment	Check Indicators	○							
	Check Battery		○						
Engine Oil	Check Engine Oil Level	○							
	Drain and Fill Engine Oil		◇ 1st time	◇ 2nd and after					
	Replace Engine Oil Filter								
Engine Speed Control	Check and Adjust Governor Lever and Engine Speed Control	○		○					
Emission Control Warranty	Inspect, Clean And Test Fuel Injectors, if necessary						●		
	DI ENGINE Inspect Turbocharger (Blower Wash as Necessary) 3TNV84T, 4TNV84T, 4TNV98T, 4TNV106T, 3TNV84T-B, 4TNV84T-Z, 4TNV98T-Z								●
	DI ENGINE Inspect, Clean and Test EGR Valve 4TNV84T, 4TNV98T						●		
	DI ENGINE Clean EGR Lead Valve 4TNV84T, 4TNV98T						●		
	DI ENGINE Clean EGR Cooler (Clean to Blow Water/Air Passages) 4TNV84T, 4TNV98T						●		
	Inspect Crankcase Breather System						●		
Fuel	Check and Refill Fuel Tank Level	○							
	Drain Fuel Tank			○					
	Drain Fuel Filter / Water Separator	○							
	Check Fuel Filter / Water Separator	○							
	Clean Fuel Filter / Water Separator				○				
	Replace Fuel Filter				◇				

○: Check ◇: Replace ●: Contact your authorized Yanmar industrial engine dealer or distributor									
System	Check Item	Daily	Periodic Maintenance Interval						
			Every 50 hours	Every 250 hours	Every 500 hours	Every 1000 hours	Every 1500 hours	Every 2000 hours	Every 3000 hours
Hoses	Replace Fuel System and Cooling System Hoses							◇ or every 2 yrs.	
Intake and Exhaust	Clean or Replace Air Cleaner Element			○	◇				
Complete Engine	Overall Visual Check Daily	○							

Note: These procedures are considered normal maintenance and are performed at the owner's expense.

PERIODIC MAINTENANCE PROCEDURES

After Initial 50 Hours of Operation

Perform the following maintenance after the initial 50 hours of operation.

- Replace Engine Oil and Engine Oil Filter
- Check and Adjust Cooling Fan V-Belt

Replace Engine Oil and Engine Oil Filter

WARNING

BURN HAZARD!

- If you must drain the engine oil while it is still hot, stay clear of the hot engine oil to avoid being burned.
- ALWAYS wear eye protection.
- Failure to comply could result in death or serious injury.

0000011en

WARNING

SUDDEN MOVEMENT HAZARD!

- Engaging the transmission or PTO at an elevated engine speed could result in unexpected movement of the equipment.
- Failure to comply could result in death or serious injury.

0000006en

CAUTION

- Only use the engine oil specified. Other engine oils may affect warranty coverage, cause internal engine components to seize and / or shorten engine life.
- Prevent dirt and debris from contaminating the engine oil. Carefully clean the oil cap / dipstick and the surrounding area before you remove the cap.
- NEVER mix different types of engine oil. This may adversely affect the lubricating properties of the engine oil.
- NEVER overfill. Overfilling may result in white exhaust smoke, engine overspeed or internal damage.

0000005en

CAUTION

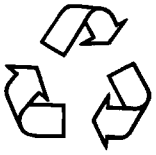

- ALWAYS be environmentally responsible.
- Follow the guidelines of the EPA or other governmental agencies for the proper disposal of hazardous materials such as engine oil, diesel fuel and engine coolant. Consult the local authorities or reclamation facility.
- NEVER dispose of hazardous materials irresponsibly by dumping them into a sewer, on the ground, or into ground water or waterways.
- Failure to follow these procedures may seriously harm the environment.

0000013en

The engine oil in a new engine becomes contaminated from the initial break-in of internal parts. It is very important that the initial oil and filter change is performed as scheduled.

Note: The oil drain plug may be in another location if an optional oil pan is used.

Drain the engine oil as follows:

1. Make sure the engine is level.
2. Start the engine and bring it up to operating temperature.
3. Stop the engine.
4. Remove one of the oil filler caps **(Figure 5-1, (1))** to vent the engine crankcase and allow the engine oil to drain more easily.
5. Position a container under the engine to collect waste oil.

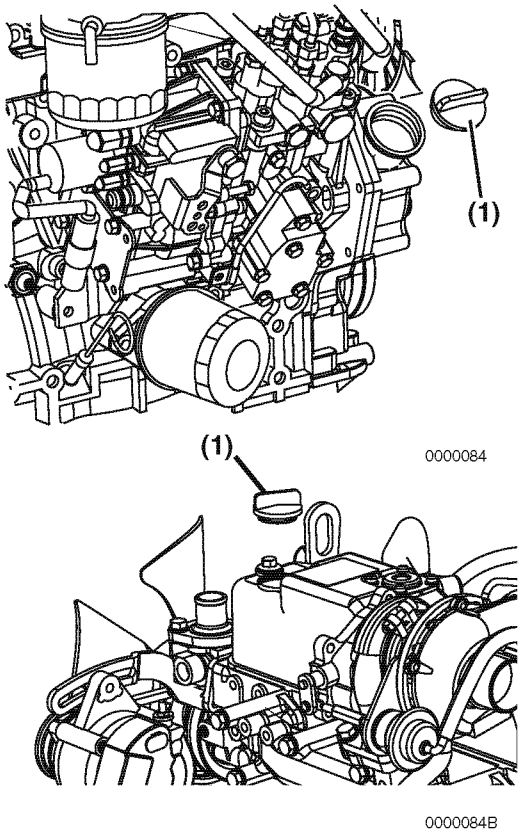

Figure 5-1

6. Remove the oil drain plug **(Figure 5-2, (1))** from the engine oil pan. Allow oil to drain.
7. After all oil has been drained from the engine, reinstall the oil drain plug **(Figure 5-2, (1))** and tighten to 139.8 - 47.0 ft·lb (53.9 - 63.7 N·m; 5.5 - 6.5 kgf·m).
8. Dispose of used oil properly.

Remove the engine oil filter as follows:

1. Turn the engine oil filter **(Figure 5-2, (2))** counterclockwise **(Figure 5-2, (3))** using a filter wrench.

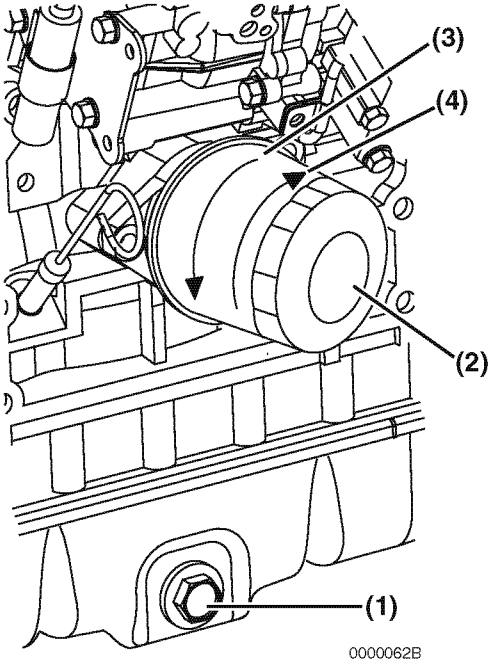

Figure 5-2

2. Clean the engine oil filter mounting face.
3. Lightly coat the gasket on the new oil filter with engine oil. Install the new engine oil filter manually by turning it clockwise **(Figure 5-2, (4))** until it contacts the mounting surface. Tighten to 14 - 17 ft·lb (19.6 - 23.5 N·m; 2.0 - 2.4 kgf·m) or one additional turn using the filter wrench.

Engine Oil Filter Part No.		
	Standard	Dust proof *
3TNV82A 3TNV84 - 4TNV98 3TNV82A-B 3TNV88-B - 4TNV98-Z 4TNV98-E	129150-35153	119005-35151
4TNV98T 4TNV98T-Z 4TNV106, 4TNV106T	119005-35151	

* Consult the operation manual for the driven machine for applicability of the dust proof filter.

4. Add new engine oil to the engine as specified in *Adding Engine Oil on page 4-17*.

CAUTION

- **NEVER overfill the engine with engine oil.**
- **ALWAYS keep the oil level between the upper and lower lines on the oil cap / dipstick.**

0000015en

5. Warm up the engine by running it for five minutes and check for any engine oil leaks.
6. After engine is warm, shut it off and let it sit for 10 minutes.
7. Recheck the engine oil level.
8. Add engine oil **(Figure 5-3, (5))** as needed until the level is between the upper **(Figure 5-3, (2))** and lower lines **(Figure 5-3, (3))** shown on the dipstick **(Figure 5-3, (1))**.

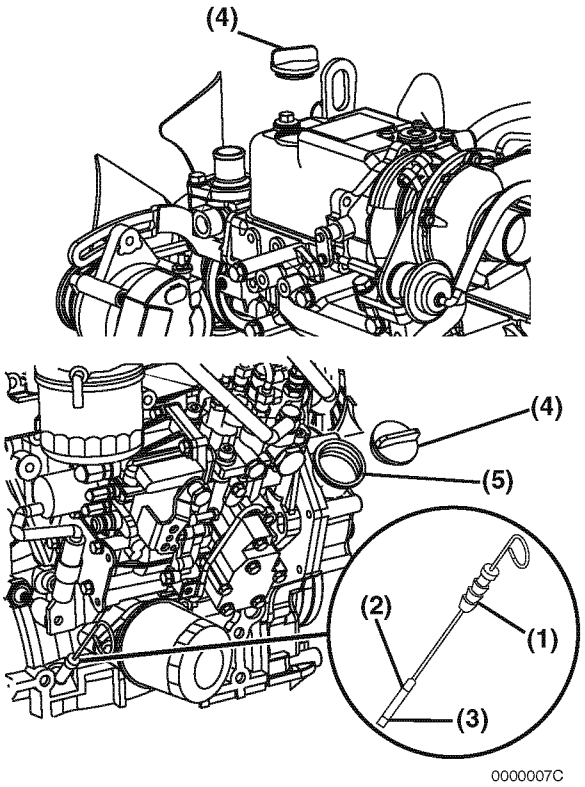

Figure 5-3

9. Reinstall the oil filler cap **(Figure 5-3, (4))**. If any engine oil is spilled, wipe it away with a clean cloth.

Check and Adjust Cooling Fan V-Belt

The V-belt will slip if it does not have the proper tension. This will prevent the alternator from generating sufficient power. Also, the engine will overheat due to the engine coolant pump pulley slipping.

Check and adjust the V-belt tension (deflection) as follows:

1. Press the V-belt down with your thumb with a force of approximately 22 ft·lb (98 N·m; 10 kgf) to check the deflection.

   There are three positions to check for V-belt tension **(Figure 5-4, (A)**, **(B)** and **(C))**. You can check the tension at whichever position is the most accessible. The proper deflection of a used V-belt at each position is:

Used V-Belt Tension		
A	B	C
3/8 - 1/2 in. (10 - 14 mm)	1/4 - 3/8 in. (7 - 10 mm)	5/16 - 1/2 in. (9 - 13 mm)

Note: A "Used V-Belt" refers to a V-belt which has been used on a running engine for five minutes or more.

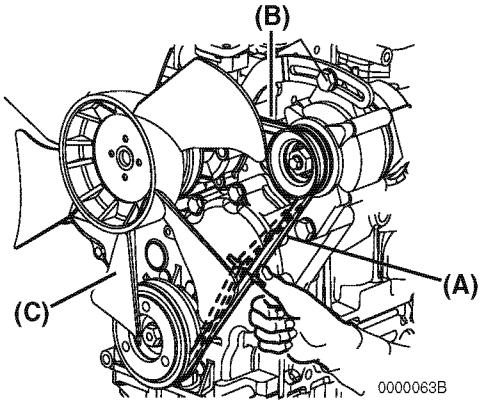

Figure 5-4

2. If necessary, adjust the V-belt tension. Loosen the adjusting bolt **(Figure 5-5, (1))** and move the alternator **(Figure 5-5, (2))** with a pry bar **(Figure 5-5, (3))** to tighten the V-belt to the desired tension. Then tighten the adjusting bolt.

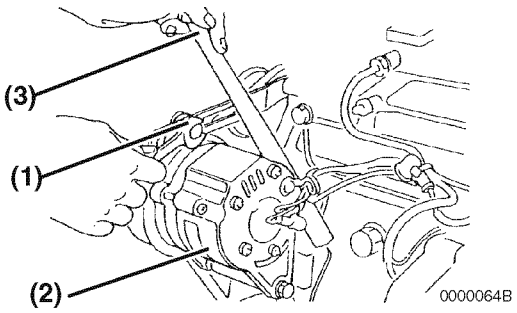

Figure 5-5

3. Tighten the V-belt to the proper tension. There must be clearance **(Figure 5-6, (1))** between the V-belt and the bottom of the pulley groove. If there is no clearance **(Figure 5-6, (2))** between the V-belt and the bottom of the pulley groove, replace the V-belt.

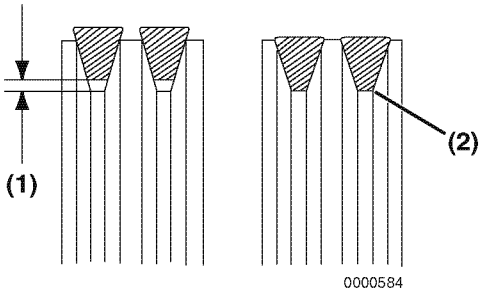

Figure 5-6

4. Check the V-belt for cracks, oil or wear. If any of these conditions exist, replace the V-belt.
5. Install the new V-belt. Refer to the table for proper tension.

New V-Belt Tension		
A	B	C
5/16 - 7/16 in. (8 - 12 mm)	3/16 - 5/16 in. (5 - 8 mm)	1/4 - 7/16 in. (7 - 11 mm)

6. After adjusting, run the engine for 5 minutes or more. Check the tension again using the specifications for a used V-belt.

Used V-Belt Tension		
A	B	C
3/8 - 1/2 in. (10 - 14 mm)	1/4 - 3/8 in. (7 - 10 mm)	5/16 - 1/2 in. (9 - 13 mm)

Every 50 Hours of Operation

After you complete the initial 50 hour maintenance procedures, perform the following procedures every 50 hours thereafter.

- **Drain Fuel Filter / Water Separator**
- **Check Battery**

Drain Fuel Filter / Water Separator

⚠ DANGER

FIRE AND EXPLOSION HAZARD!

- **Diesel fuel is flammable and explosive under certain conditions.**
- **When you remove any fuel system component to perform maintenance (such as changing the fuel filter) place an approved container under the opening to catch the fuel.**
- **NEVER use a shop rag to catch the fuel. Vapors from the rag are flammable and explosive.**
- **Wipe up any spills immediately.**
- **Wear eye protection. The fuel system is under pressure and fuel could spray out when you remove any fuel system component.**
- **Failure to comply will result in death or serious injury.**

0000009en

CAUTION

If the fuel filter / water separator is positioned higher than the fuel level in the fuel tank, water may not drip out when the fuel filter / water separator drain cock is opened. If this happens, turn the air vent screw on the top of the fuel filter / water separator 2-3 turns counterclockwise.

Be sure to tighten the air vent screw after the water has drained out.

0000025en

CAUTION

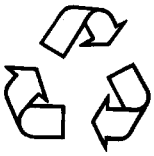

- **ALWAYS be environmentally responsible.**
- **Follow the guidelines of the EPA or other governmental agencies for the proper disposal of hazardous materials such as engine oil, diesel fuel and engine coolant. Consult the local authorities or reclamation facility.**
- **NEVER dispose of hazardous materials irresponsibly by dumping them into a sewer, on the ground, or into ground water or waterways.**
- **Failure to follow these procedures may seriously harm the environment.**

0000013en

Drain the fuel filter / water separator whenever there are contaminants, such as water, collected in the bottom of the cup. NEVER wait until the scheduled periodic maintenance if contaminants are discovered.

The cup of the separator is made from semi-transparent material. In the cup is a red colored float ring. The float ring will rise to the surface of the water to show how much needs to be drained. Also, some optional fuel filter / water separators are equipped with a sensor to detect the amount of contaminants. This sensor sends a signal to an indicator to alert the operator.

Drain the fuel filter / water separator as follows:

1. Position an approved container under the fuel filter / water separator **(Figure 5-7, (1))** to collect the contaminants.

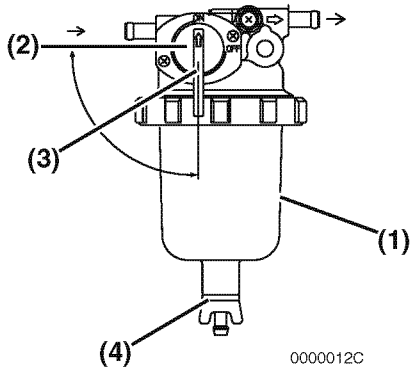

Figure 5-7

2. Close **(Figure 5-7, (2))** the fuel cock **(Figure 5-7, (3))**.
3. Loosen the drain cock **(Figure 5-7, (4))** at the bottom of the fuel filter / water separator. Drain any water collected inside.
4. Hand-tighten the drain cock.

CAUTION

If the fuel filter / water separator is positioned higher than the fuel level in the fuel tank, water may not drip out when the fuel filter / water separator drain cock is opened. If this happens, turn the air vent screw on the top of the fuel filter / water separator 2-3 turns counterclockwise.

Be sure to tighten the air vent screw after the water has drained out.

0000025en

5. Open the fuel cock **(Figure 5-7, (3))**.
6. Be sure to prime the diesel fuel system when you are finished. *See Priming the Fuel System on page 4-15.*
7. Check for leaks.

Check Battery

DANGER

EXPLOSION HAZARD!

- **NEVER check the remaining battery charge by shorting out the terminals. This will result in a spark and may cause an explosion or fire. Use a hydrometer to check the remaining battery charge.**
- **If the electrolyte is frozen, slowly warm the battery before you recharge it.**
- **Failure to comply will result in death or serious injury.**

0000007en

WARNING

BURN HAZARD!

- **Batteries contain sulfuric acid. NEVER allow battery fluid to come in contact with clothing, skin or eyes. Severe burns could result. ALWAYS wear safety goggles and protective clothing when servicing the battery. If battery fluid contacts the eyes and / or skin, immediately flush the affected area with a large amount of clean water and obtain prompt medical treatment.**
- **Failure to comply could result in death or serious injury.**

0000007en

CAUTION

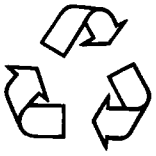

- **ALWAYS be environmentally responsible.**
- **Follow the guidelines of the EPA or other governmental agencies for the proper disposal of hazardous materials such as engine oil, diesel fuel and engine coolant. Consult the local authorities or reclamation facility.**
- **NEVER dispose of hazardous materials irresponsibly by dumping them into a sewer, on the ground, or into ground water or waterways.**
- **Failure to follow these procedures may seriously harm the environment.**

0000013en

- When the amount of fluid nears the lower limit **(Figure 5-8, (1))**, fill with distilled water **(Figure 5-8, (2))** so it is at the upper limit **(Figure 5-8, (3))**. If operation continues with insufficient battery fluid, the battery life is shortened, and the battery may overheat and explode. During the summer, check the fluid level more often than specified.

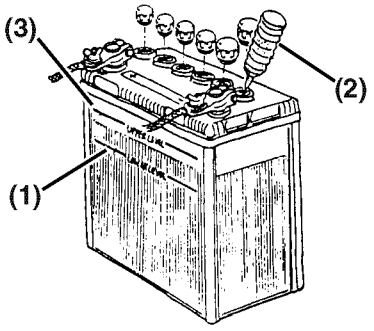

0000067A

Figure 5-8

- If the engine cranking speed is so slow that the engine does not start, recharge the battery.
- If the engine still will not start after charging, have your authorized Yanmar industrial engine dealer or distributor check the battery and the engine's starting system.
- If operating the machine where the ambient temperature could drop to 5°F (-15°C) or less, remove the battery from the machine at the end of the day. Store the battery in a warm place until the next use. This will help start the engine easily at low ambient temperatures.

Every 250 Hours of Operation

Perform the following maintenance every 250 hours of operation.

- **Drain Fuel Tank**
- **Replace Engine Oil and Engine Oil Filter**
- **Check and Clean Radiator Fins**
- **Check and Adjust Cooling Fan V-Belt**
- **Check and Adjust the Governor Lever and Engine Speed Control**
- **Clean Air Cleaner Element**

Drain Fuel Tank

⚠ DANGER

FIRE AND EXPLOSION HAZARD!

- **Diesel fuel is flammable and explosive under certain conditions.**
- **When you remove any fuel system component to perform maintenance (such as changing the fuel filter) place an approved container under the opening to catch the fuel.**
- **NEVER use a shop rag to catch the fuel. Vapors from the rag are flammable and explosive.**
- **Wipe up any spills immediately.**
- **Wear eye protection. The fuel system is under pressure and fuel could spray out when you remove any fuel system component.**
- **Failure to comply will result in death or serious injury.**

0000009en

CAUTION

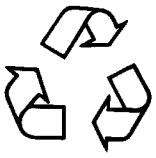

- **ALWAYS be environmentally responsible.**
- **Follow the guidelines of the EPA or other governmental agencies for the proper disposal of hazardous materials such as engine oil, diesel fuel and engine coolant. Consult the local authorities or reclamation facility.**
- **NEVER dispose of hazardous materials irresponsibly by dumping them into a sewer, on the ground, or into ground water or waterways.**
- **Failure to follow these procedures may seriously harm the environment.**

0000013en

Note that a typical fuel tank is illustrated.

1. Position an approved container under the diesel fuel tank **(Figure 5-9, (1))** to collect the contaminates.
2. Remove the fuel cap **(Figure 5-9, (3))**.
3. Remove the drain plug **(Figure 5-9, (2))** of the fuel tank to drain the contaminates (water, dirt, etc.) from the bottom of the tank.

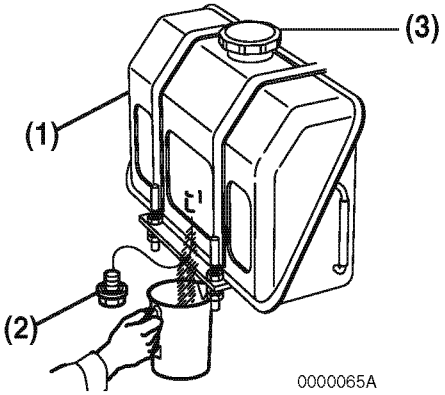

Figure 5-9

4. Drain the tank until clean diesel fuel with no water and dirt flows out. Reinstall and tighten the drain plug firmly.
5. Reinstall the fuel cap.
6. Check for leaks.

Replace Engine Oil and Engine Oil Filter

CAUTION

- **Only use the engine oil specified. Other engine oils may affect warranty coverage, cause internal engine components to seize and / or shorten engine life.**
- **Prevent dirt and debris from contaminating the engine oil. Carefully clean the oil cap / dipstick and the surrounding area before you remove the cap.**
- **NEVER mix different types of engine oil. This may adversely affect the lubricating properties of the engine oil.**
- **NEVER overfill. Overfilling may result in white exhaust smoke, engine overspeed or internal damage.**

0000005en

CAUTION

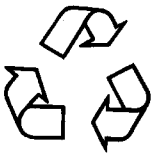

- **ALWAYS be environmentally responsible.**
- **Follow the guidelines of the EPA or other governmental agencies for the proper disposal of hazardous materials such as engine oil, diesel fuel and engine coolant. Consult the local authorities or reclamation facility.**
- **NEVER dispose of hazardous materials irresponsibly by dumping them into a sewer, on the ground, or into ground water or waterways.**
- **Failure to follow these procedures may seriously harm the environment.**

0000013en

Change the engine oil every 250 hours of operation after the initial change at 50 hours. Replace the engine oil filter at the same time. *See Replace Engine Oil and Engine Oil Filter on page 5-20.*

Check and Clean Radiator Fins

⚠ CAUTION

FLYING OBJECT HAZARD!

- **ALWAYS wear eye protection when servicing the engine and when using compressed air or high-pressure water. Dust, flying debris, compressed air, pressurized water or steam may injure your eyes.**
- **Failure to comply may result in minor or moderate injury.**

0000003en

Dirt and dust adhering to the radiator fins reduce the cooling performance, causing overheating. Make it a rule to check the radiator fins daily and clean as needed.

Note that a typical radiator is shown in **Figure 5-10** for illustrative purposes only.

- Blow off dirt and dust from fins and radiator with 28 psi (0.19 MPa; 2 kgf/cm^2) or less of compressed air **(Figure 5-10, (1))**. Be careful not to damage the fins with the compressed air.
- If there is a large amount of contamination on the fins, apply detergent, thoroughly clean and rinse with tap water.

CAUTION

NEVER use high-pressure water or compressed air at greater than 28 psi (193 kPa; 19 686 mmAq) or a wire brush to clean the radiator fins. Radiator fins damage easily.

0000016en

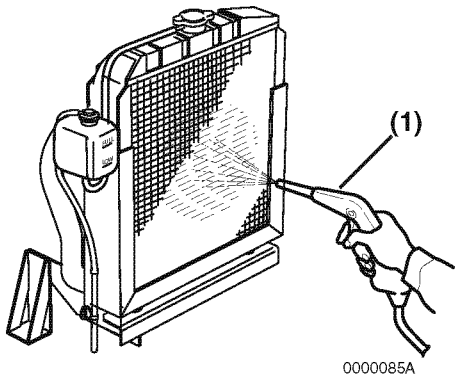

Figure 5-10

Check and Adjust Cooling Fan V-Belt

Check and adjust the cooling fan V-belt every 250 hours of operation after the initial 50 hour V-belt maintenance. *See Check and Adjust Cooling Fan V-Belt on page 5-22.*

Check and Adjust the Governor Lever and Engine Speed Control (This does not apply to the following electronically controlled engines: 4TNV84T-Z, 4TNV98-E, Z, and 4TNV98T-Z.)

The governor lever and engine speed control (throttle lever, pedal, etc.) of the machine are connected together by a throttle cable or rod. If the cable becomes stretched, or the connections loosen, the governor lever may not respond to change of engine speed control position. This may make operation of the machine unsafe. Check the cable periodically and adjust if necessary.

NEVER force the throttle cable or pedal to move. This may deform the governor lever or stretch the cable and cause irregular operation of the engine speed control.

Checking and adjusting the governor lever:

1. Check that the governor lever **(Figure 5-11, (1))** makes uniform contact with the high idle **(Figure 5-11, (2))** and low idle **(Figure 5-11, (3))** speed limit screws when the engine speed control is in the high idle speed or low idle speed position.

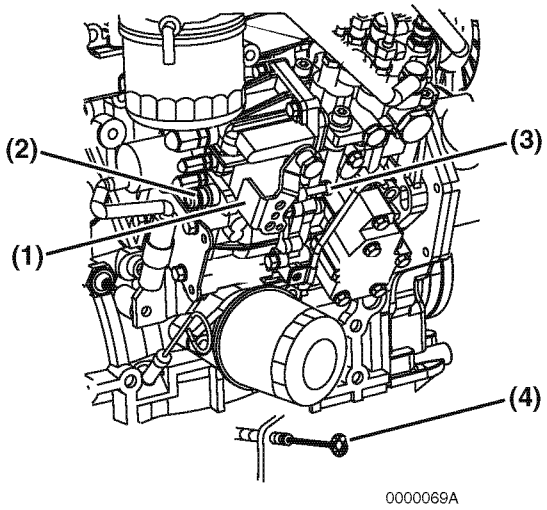

Figure 5-11

2. If the governor lever does not make contact with the high idle or low idle speed limit screw, adjust the throttle cable.
3. In some engine speed control applications, loosen the throttle cable lock nut **(Figure 5-11, (4))** and adjust the cable so the governor lever makes proper contact with the high / low idle speed limit screw.

CAUTION

NEVER attempt to adjust the low or high idle speed limit screw. This may impair the safety and performance of the machine and shorten its life. If the idle speed limit screws require adjustment, see your authorized Yanmar industrial engine dealer or distributor.

0000017en

Clean Air Cleaner Element

Note that a typical air cleaner is shown in **Figure 5-12** and **Figure 5-13** for illustrative purposes only.

The engine performance is adversely affected when the air cleaner element is clogged with dust. Be sure to clean the air filter element periodically.

1. Unlatch and remove the air cleaner cover **(Figure 5-12, (1))**.

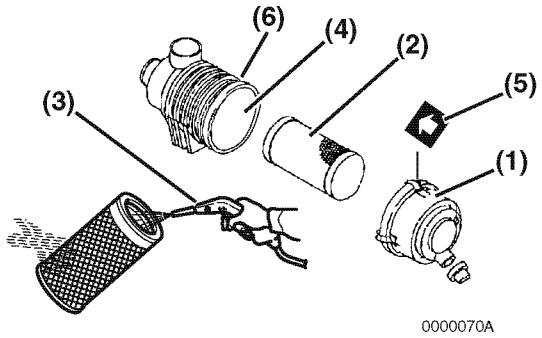

Figure 5-12

2. Remove the element **(Figure 5-12, (2))** (outer element if equipped with two elements).

⚠ CAUTION

FLYING OBJECT HAZARD!

- **ALWAYS wear eye protection when servicing the engine and when using compressed air or high-pressure water. Dust, flying debris, compressed air, pressurized water or steam may injure your eyes.**
- **Failure to comply may result in minor or moderate injury.**

0000003en

3. Blow air **(Figure 5-12, (3))** through the element from the inside out using 42 - 71 psi (0.29 - 0.49 MPa; 3.0 - 5.0 kgf/cm^2) compressed air to remove the particulates. Use the lowest possible air pressure to remove the dust without damaging the element.
4. If the air cleaner is equipped with a double element, only remove and replace the inner element **(Figure 5-13, (1))** *if the engine lacks power or the dust indicator actuates (if equipped).*

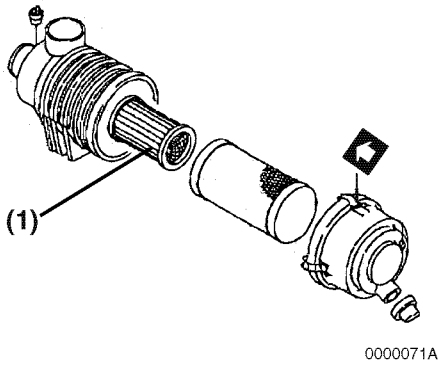

Figure 5-13

5. The inner element should not be removed when cleaning or replacing the outer element. The inner element is used to prevent dust from entering the engine while servicing the outer element.

6. Replace the element with a new one if the element is damaged, excessively dirty or oily.
7. Clean inside of the air cleaner cover.
8. Install the element into the air cleaner case **(Figure 5-12, (4))**.
9. Reinstall the air cleaner cover making sure you match the arrow **(Figure 5-12, (5))** on the cover with the arrow on the case **(Figure 5-12, (6))**.
10. Latch the air cleaner cover to the case.

CAUTION

- **When the engine is operated in dusty conditions, clean the air cleaner element more frequently.**
- **NEVER operate the engine with the air cleaner element(s) removed. This may allow foreign material to enter the engine and damage it.**

0000026en

Every 500 Hours of Operation

Perform the following maintenance every 500 hours of operation.

- **Replace Air Cleaner Element**
- **Replace Fuel Filter**
- **Clean Fuel Filter / Water Separator**

Replace Air Cleaner Element

CAUTION

The maximum air intake restriction, in terms of differential pressure measurement, must not exceed 0.90 psi (6.23 kPa; 635 mmAq). Clean or replace the air cleaner element if the air intake restriction exceeds the above mentioned value.

0000046en

Replace the air cleaner element **(Figure 5-12, (2))** every 500 hours even if it is not damaged or dirty.

When replacing the element, clean the inside of the air cleaner case **(Figure 5-12, (4))**.

If the air cleaner is equipped with a double element, *only remove and replace the inner element* **(Figure 5-13, (1))** *if the engine lacks power or the dust indicator actuates (if equipped).* This is in addition to replacing the outer element.

Replace Fuel Filter

⚠ DANGER

FIRE AND EXPLOSION HAZARD!

- **Diesel fuel is flammable and explosive under certain conditions.**
- **When you remove any fuel system component to perform maintenance (such as changing the fuel filter) place an approved container under the opening to catch the fuel.**
- **NEVER use a shop rag to catch the fuel. Vapors from the rag are flammable and explosive.**
- **Wipe up any spills immediately.**
- **Wear eye protection. The fuel system is under pressure and fuel could spray out when you remove any fuel system component.**
- **Failure to comply will result in death or serious injury.**

0000009en

CAUTION

For maximum engine life, Yanmar recommends that when shutting the engine down, you allow the engine to idle, without load, for five minutes. This will allow the engine components that operate at high temperatures, such as the turbocharger (if equipped) and exhaust system, to cool slightly before the engine itself is shut down.

0000008en

CAUTION

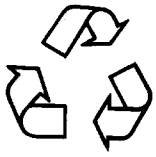

- **ALWAYS be environmentally responsible.**
- **Follow the guidelines of the EPA or other governmental agencies for the proper disposal of hazardous materials such as engine oil, diesel fuel and engine coolant. Consult the local authorities or reclamation facility.**
- **NEVER dispose of hazardous materials irresponsibly by dumping them into a sewer, on the ground, or into ground water or waterways.**
- **Failure to follow these procedures may seriously harm the environment.**

0000013en

Replace the fuel filter at specified intervals to prevent contaminants from adversely affecting the diesel fuel flow.

1. Stop the engine and allow it to cool.
2. Close the fuel cock of the fuel filter / water separator.
3. Remove the fuel filter with a filter wrench, turning it to the left **(Figure 5-14, (1))**. When removing the fuel filter, carefully hold it to prevent the fuel from spilling. Wipe up all spilled fuel.

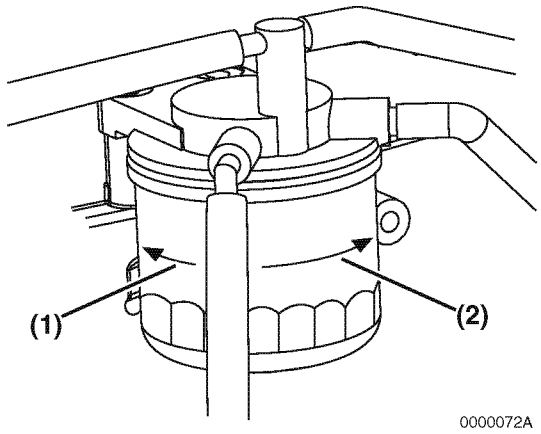

Figure 5-14

4. Clean the filter mounting surface and apply a small amount of diesel fuel to the gasket of the new fuel filter.
5. Install the new fuel filter. Turn to the right **(Figure 5-14, (2))** and hand-tighten it only until it comes in contact with the mounting surface. Tighten to 14 - 17 ft·lb (19.6 - 23.5 N·m; 2.0 - 2.4 kgf·m) or one additional turn using the filter wrench.

Applicable Fuel Filter Part No.		
	Standard	Dust proof *
3TNV82A, -4TNV98 3TNV82A-B, -4TNV98-B	119802-55801	129907-55801
4TNV98T, 4TNV98T-Z, -4TNV106T	123907-55801	

* Consult the operation manual for the driven machine for applicability of the dust proof filter.

6. Open the fuel cock of the fuel filter / water separator.
7. Prime the fuel system. *See Priming the Fuel System on page 4-15.*
8. Check for leaks.

Clean Fuel Filter / Water Separator

⚠ DANGER

FIRE AND EXPLOSION HAZARD!

- **Diesel fuel is flammable and explosive under certain conditions.**
- **NEVER use diesel fuel as a cleaning agent.**
- **Failure to comply will result in death or serious injury.**

0000012en

⚠ DANGER

FIRE AND EXPLOSION HAZARD!

- **Diesel fuel is flammable and explosive under certain conditions.**
- **When you remove any fuel system component to perform maintenance (such as changing the fuel filter) place an approved container under the opening to catch the fuel.**
- **NEVER use a shop rag to catch the fuel. Vapors from the rag are flammable and explosive.**
- **Wipe up any spills immediately.**
- **Wear eye protection. The fuel system is under pressure and fuel could spray out when you remove any fuel system component.**
- **Failure to comply will result in death or serious injury.**

0000009en

CAUTION

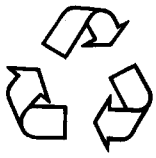

- **ALWAYS be environmentally responsible.**
- **Follow the guidelines of the EPA or other governmental agencies for the proper disposal of hazardous materials such as engine oil, diesel fuel and engine coolant. Consult the local authorities or reclamation facility.**
- **NEVER dispose of hazardous materials irresponsibly by dumping them into a sewer, on the ground, or into ground water or waterways.**
- **Failure to follow these procedures may seriously harm the environment.**

0000013en

Periodically clean the fuel filter / water separator element and inside cup.

1. Position an approved container under the cup **(Figure 5-15, (1))** of the fuel filter / water separator to collect the contaminants.

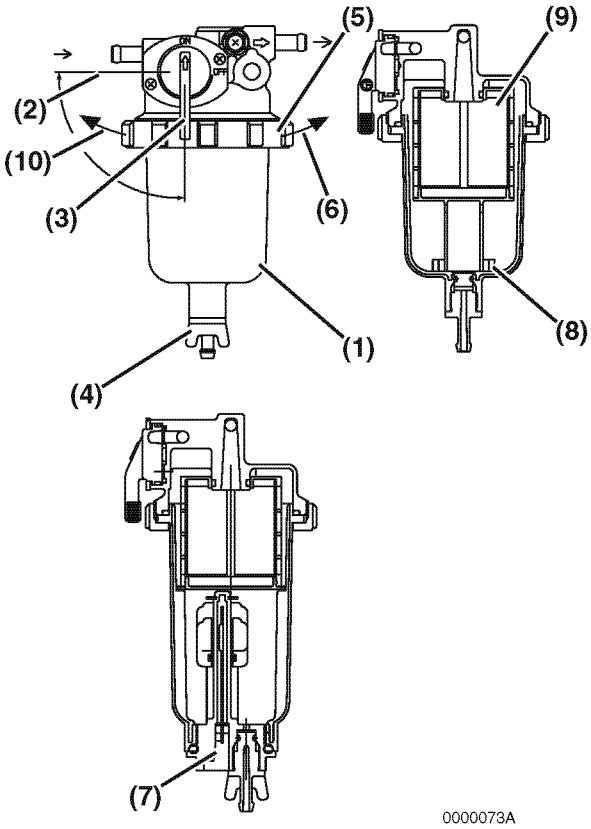

Figure 5-15

2. Close **(Figure 5-15, (2))** the fuel cock **(Figure 5-15, (3))**.
3. Loosen the drain cock **(Figure 5-15, (4))** and drain the contaminants. *See Drain Fuel Filter / Water Separator on page 5-24.*
4. Turn the retaining ring **(Figure 5-15, (5))** to the left **(Figure 5-15, (10))** and remove the cup **(Figure 5-15, (6))**. If equipped, disconnect the sensor wire **(Figure 5-15, (7))** from the cup before removing the cup.
5. Carefully hold the cup to prevent fuel from spilling. If you spill any fuel, clean up the spill completely.

6. Remove the float ring **(Figure 5-15, (8))** from the cup. Pour the contaminants into the container and dispose of it properly.
7. Clean the element **(Figure 5-15, (9))** and inside cup. Replace the element if it is damaged.

Applicable Element Part No.	
All Models	119802-55710

8. Install the element and O-ring in the bracket.
9. Position the float ring in the cup.
10. Check the condition of the cup O-ring. Replace if necessary.
11. Install the cup to the bracket by tightening the retaining ring to the right **(Figure 5-15, (6))** to a torque of 11 - 15 ft·lb (15 - 20 N·m; 1.5 - 2.0 kgf·m).
12. Close the drain cock. Reconnect the sensor wire if equipped.
13. Open the fuel cock **(Figure 5-15, (3))**.
14. Prime the fuel system. *See Priming the Fuel System on page 4-15.*
15. Check for leaks.

Every 1000 Hours of Operation

Perform the following maintenance every 1000 hours of operation.

- **Drain, Flush and Refill Cooling System With New Coolant**
- **Adjust Intake / Exhaust Valve Clearance**

Drain, Flush and Refill Cooling System With New Coolant

⚠ DANGER

SCALD HAZARD!

- **NEVER remove the radiator cap if the engine is hot. Steam and hot engine coolant will spurt out and seriously burn you. Allow the engine to cool down before you attempt to remove the radiator cap.**
- **Tighten the radiator cap securely after you check the radiator. Steam can spurt out during engine operation if the cap is loose.**
- **ALWAYS check the level of the engine coolant by observing the reserve tank.**
- **Failure to comply will result in death or serious injury.**

0000002en

WARNING

BURN HAZARD!

- **Wait until the engine cools before you drain the engine coolant. Hot engine coolant may splash and burn you.**
- **Failure to comply could result in death or serious injury.**

0000016en

CAUTION

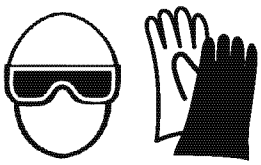

COOLANT HAZARD!

- **Wear eye protection and rubber gloves when you handle long life or extended life engine coolant. If contact with the eyes or skin should occur, flush eyes and wash immediately with clean water.**
- **Failure to comply may result in minor or moderate injury.**

0000005en

CAUTION

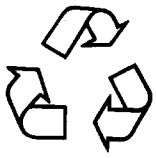

- **ALWAYS be environmentally responsible.**
- **Follow the guidelines of the EPA or other governmental agencies for the proper disposal of hazardous materials such as engine oil, diesel fuel and engine coolant. Consult the local authorities or reclamation facility.**
- **NEVER dispose of hazardous materials irresponsibly by dumping them into a sewer, on the ground, or into ground water or waterways.**
- **Failure to follow these procedures may seriously harm the environment.**

0000013en

Engine coolant contaminated with rust or scale reduces the cooling effect. Even when extended life engine coolant is properly mixed, the engine coolant gets contaminated as its ingredients deteriorate. Drain, flush and refill the cooling system with new coolant every 1000 hours or once a year, whichever comes first.

1. Allow engine and coolant to cool.
2. Remove the radiator cap **(Figure 5-16, (1))**.
3. Remove the drain plug or open the drain cock **(Figure 5-16, (2))** at the lower portion of the radiator and drain the engine coolant.

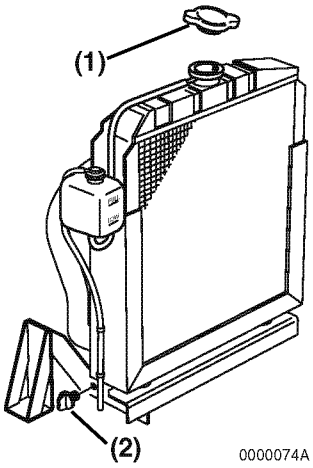

Figure 5-16

4. Drain the coolant from the engine block.
   - On models not equipped with an oil cooler, remove the coolant drain plug **(Figure 5-17, (1))** from the engine block.

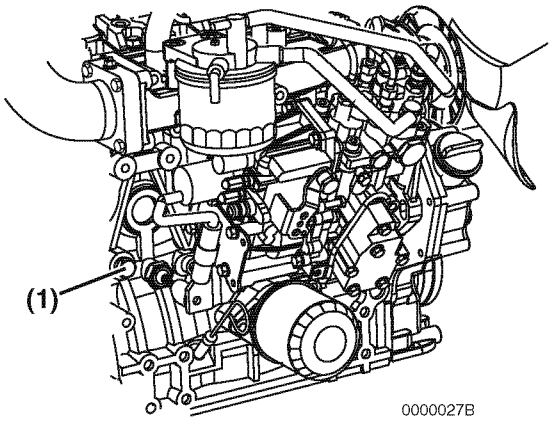

Figure 5-17

- On models equipped with an oil cooler, remove the coolant hose **(Figure 5-18, (1))** at the oil cooler.

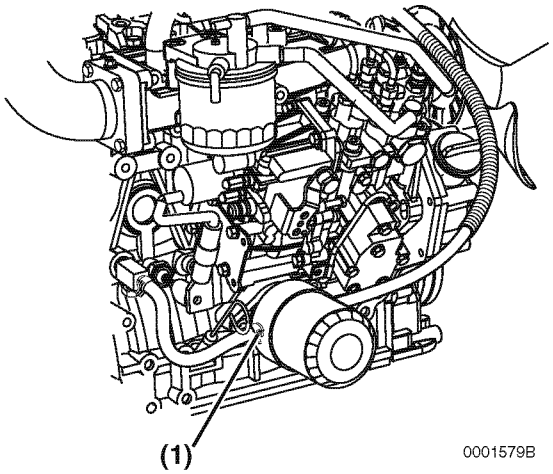

Figure 5-18

5. After draining the engine coolant, flush the radiator and engine block to remove any rust, scale and contaminants. Then reinstall and tighten the drain plug or close the drain cock in the radiator. Reinstall and tighten the cylinder block drain plug or reconnect the coolant hose at the oil cooler.
6. Fill radiator and engine with engine coolant. *See Filling Radiator with Engine Coolant on page 4-19.*

Adjust Intake / Exhaust Valve Clearance

Proper adjustment is necessary to maintain the correct timing for opening and closing the valves. Improper adjustment will cause the engine to run noisily, resulting in poor engine performance and engine damage. *See Intake / Exhaust Valve and Guide on page 6-7.*

Every 1500 Hours of Operation

Perform the following maintenance every 1500 hours of operation.

- **Inspect, Clean and Test Fuel Injectors, if necessary**
- **Inspect, Clean and Test EGR Valve 4TNV84T-Z, 4TNV98T-E, 4TNV98-Z, 4TNV98T-Z**
- **Inspect and Clean EGR Lead Valve 4TNV84T-Z, 4TNV98T-Z**
- **Clean EGR Cooler 4TNV84T-Z, 4TNV98T-Z**
- **Inspect Crankcase Breather System**

Inspect, Clean and Test Fuel Injectors

⚠ WARNING

HIGH-PRESSURE HAZARD!

- **Avoid skin contact with the high-pressure diesel fuel spray caused by a fuel system leak such as a broken fuel injection line. High-pressure fuel can penetrate your skin and result in serious injury. If you are exposed to high-pressure fuel spray, obtain prompt medical treatment.**
- **NEVER check for a fuel leak with your hands. ALWAYS use a piece of wood or cardboard. Have your authorized Yanmar industrial engine dealer or distributor repair the damage.**
- **Failure to comply could result in death or serious injury.**

0000008en

Proper operation of the fuel injectors is required to obtain the optimum injection pattern for full engine performance. The EPA / ARB requires that the fuel injectors are inspected, cleaned and tested every 1500 hours. *See Testing of Fuel Injectors on page 7-38.*

This procedure is considered normal maintenance and is performed at the owner's expense. This procedure is not covered by the Yanmar Limited Warranty.

Inspect, Clean and Test EGR Valve

4TNV84T-Z, 4TNV98T-E, 4TNV98-Z, 4TNV98T-Z

The EGR valve is a key component for cleaning exhaust gas.

To prevent the valve from deteriorating in exhaust gas recirculation performance due to carbon accumulation, inspect, clean and test the valve at least every 1500 hours.

Consult your local Yanmar dealer for this service.

Inspect and Clean EGR Lead Valve

4TNV84T-Z, 4TNV98T-Z

The EGR lead valve is located in the passage of recirculated gas.

To prevent carbon accumulation in or clogging of the lead valve, inspect and clean the lead valve at regular intervals.

Consult your local Yanmar dealer for this service.

Clean EGR Cooler

4TNV84T-Z, 4TNV98T-Z

The EGR cooler is apt to be contaminated with rust and scale that deteriorate the cooling performance. Carbon accumulation in the exhaust gas passage of the cooler hinders circulation of exhaust gas, resulting in deterioration in exhaust gas cleanup performance.

To prevent such a problem, clean the cooler at least every 1500 hours.

Consult your local Yanmar dealer for this service.

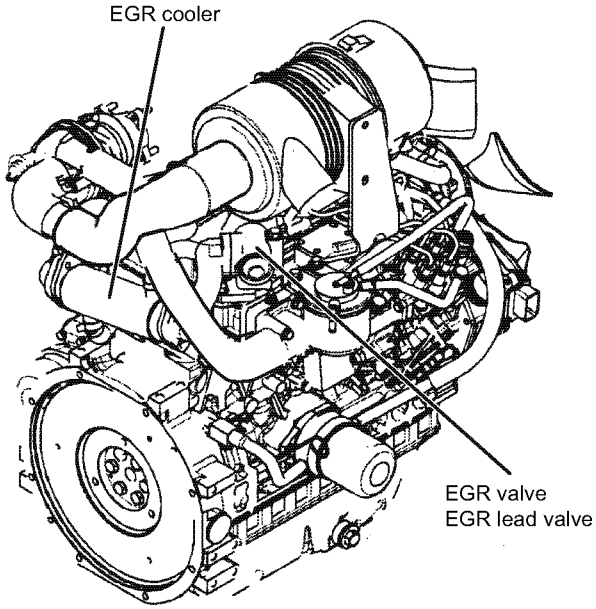

Figure 5-19

Inspect Crankcase Breather System

Proper operation of the crankcase breather system is required to maintain the emission requirements of the engine. The EPA / ARB requires that the crankcase breather system is inspected every 1500 hours.

There are three different crankcase breather systems used on the TNV engines. Only the non-turbo TNV engines crankcase breather system requires periodic maintenance.

The non-turbo TNV engines use a crankcase breather system that has a spring-backed diaphragm **(Figure 5-20, (1))** in the valve cover **(Figure 5-20, (2))**. When the crankcase pressure reaches a predetermined value, the diaphragm opens a passage that allows crankcase fumes to be routed to the intake manifold.

To inspect the diaphragm and spring **(Figure 5-20, (3))**:

1. Remove the bolts retaining the diaphragm cover **(Figure 5-20, (4))**.

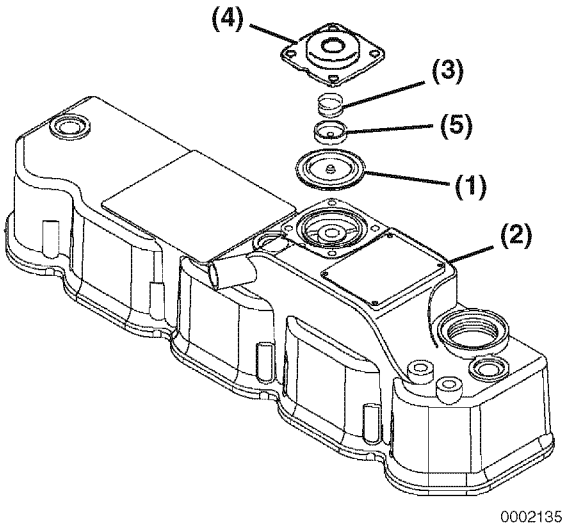

Figure 5-20

2. Remove the diaphragm cover, spring, diaphragm plate **(Figure 5-20, (5))** and diaphragm.
3. Inspect the diaphragm for tears. Inspect the spring for distortion. Replace components if necessary.
4. Reinstall the diaphragm, diaphragm plate, spring and diaphragm cover. Tighten the diaphragm bolts to specified torque.

Failure of the diaphragm and / or spring will cause the loss of pressure control and allow an excessive amount of crankcase fumes to be routed to the intake manifold. This could result in excessive deposits in the intake system, high engine exhaust smoke levels, excessive engine oil consumption, and / or engine run-on due to the burning of the engine oil.

Every 2000 Hours of Operation

Perform the following maintenance every 2000 hours of operation.

- **Check and Replace Fuel Hoses and Engine Coolant Hoses**
- **Lap the Intake and Exhaust Valves. If necessary**

Check and Replace Fuel Hoses and Engine Coolant Hoses

CAUTION

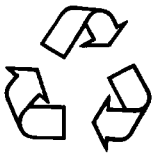

- **ALWAYS be environmentally responsible.**
- **Follow the guidelines of the EPA or other governmental agencies for the proper disposal of hazardous materials such as engine oil, diesel fuel and engine coolant. Consult the local authorities or reclamation facility.**
- **NEVER dispose of hazardous materials irresponsibly by dumping them into a sewer, on the ground, or into ground water or waterways.**
- **Failure to follow these procedures may seriously harm the environment.**

0000013en

Regularly check the fuel system and engine coolant system hoses. If they are cracked or degraded, replace them. Replace the hoses at least every two years.

Lap the Intake and Exhaust Valves

Adjustment is necessary to maintain proper contact of the valves and seats. *See Inspection of Intake and Exhaust Valves on page 6-42.*

Every 3000 Hours of Operation

Perform the following maintenance every 2000 hours of operation.

- **Inspect Turbocharger (Blower Wash as Necessary) - 3TNV84T, 4TNV84T, 4TNV98T and 4TNV106T, 3TNV84T-B, 4TNV84T-Z, 4TNV98T-Z**

Inspect Turbocharger (Blower Wash as Necessary) - 3TNV84T, 4TNV98T, 4TNV84T, and 4TNV106T, 3TNV84T-Z, 4TNV84T-Z, 4TNV98T-Z

Turbocharger service is required by the EPA / ARB every 1500 hours. Inspect, clean and blower wash the unit if necessary (*see Periodic Inspection on page 10-13*). If you notice that the engine seems sluggish or the exhaust color is abnormal NEVER wait until the next service interval.

Section 6

ENGINE

Page

Before You Begin Servicing 6-3

Introduction 6-6

Cylinder Head Specifications 6-6
- Adjustment Specifications 6-6
- Cylinder Head 6-6
- Intake / Exhaust Valve and Guide 6-7
- Push Rod 6-9
- Rocker Arm and Shaft 6-9
- Valve Spring 6-10

Camshaft and Timing Gear Train Specifications 6-11
- Camshaft 6-11
- Idler Gear Shaft and Bushing 6-13
- Timing Gear Backlash 6-13

Crankshaft and Piston Specifications 6-14
- Crankshaft 6-14
- Thrust Bearing 6-15
- Piston 6-16
- Piston Ring 6-18
- Connecting Rod 6-22
- Tappet 6-23

Cylinder Block Specifications 6-24
- Cylinder Block 6-24

Special Torque Chart 6-25
- Torque for Bolts and Nuts 6-25

Special Service Tools 6-28

Measuring Instruments 6-32

2-Valve Cylinder Head 6-34
- 2-Valve Cylinder Head Components 6-34

Components of a two-valve cylinder head 6-35
Disassembly of 2-Valve Cylinder Head 6-36
Cleaning of Cylinder Head Components 6-40
Inspection of Cylinder Head Components 6-40
Reassembly of Cylinder Head 6-44

4-Valve Cylinder Head 6-49
4-Valve Cylinder Head Components 6-49
Disassembly of 4-Valve Cylinder Head 6-50
Cleaning of Cylinder Head Components 6-55
Inspection of Cylinder Head Components 6-56
Reassembly of Cylinder Head 6-61

Measuring and Adjusting Valve Clearance 6-66
2-Valve Cylinder Heads 6-67
4-Valve Cylinder Heads 6-68

Crankshaft and Camshaft Components 6-71
Disassembly of Engine 6-72
Disassembly of Camshaft and Timing Components 6-73
Disassembly of Crankshaft and Piston Components 6-78
Inspection of Crankshaft and Camshaft Components 6-82
Honing and Boring 6-88
Reassembly of Crankshaft and Piston Components 6-89
Reassembly of Camshaft and Timing Components 6-95
Final Reassembly of Engine 6-99

EGR system 6-100
EGR system 6-100
EGR system 6-102
Inspecting/cleaning EGR related components 6-105

BEFORE YOU BEGIN SERVICING

WARNING

To prevent possible eye injury, always wear SAFETY GLASSES while servicing the engine.

0000013en

WARNING

ENTANGLEMENT HAZARD!

- Stop the engine before you begin to service it.
- NEVER leave the key in the key switch when you are servicing the engine. Someone may accidentally start the engine and not realize you are servicing it. This could result in a serious injury.
- If you must service the engine while it is operating, remove all jewelry, tie back long hair, and keep your hands, other body parts and clothing away from moving / rotating parts.
- Failure to comply could result in death or serious injury.

0000010en

WARNING

FUME / BURN HAZARD!

- Always read and follow safety related precautions found on containers of hazardous substances like parts cleaners, primers, sealants and sealant removers.
- Failure to comply could result in death or serious injury.

0000014en

CAUTION

FLYING OBJECT HAZARD!

- ALWAYS wear eye protection when servicing the engine and when using compressed air or high-pressure water. Dust, flying debris, compressed air, pressurized water or steam may injure your eyes.
- Failure to comply may result in minor or moderate injury.

0000003en

CAUTION

Be sure to secure the engine solidly to prevent injury or damage to parts due to the engine falling during work on the engine.

0000009en

CAUTION

- Only use the engine oil specified. Other engine oils may affect warranty coverage, cause internal engine components to seize and / or shorten engine life.
- Prevent dirt and debris from contaminating the engine oil. Carefully clean the oil cap / dipstick and the surrounding area before you remove the cap.
- NEVER mix different types of engine oil. This may adversely affect the lubricating properties of the engine oil.
- NEVER overfill. Overfilling may result in white exhaust smoke, engine overspeed or internal damage.

0000005en

CAUTION

- Only use the engine coolant specified. Other engine coolants may affect warranty coverage, cause an internal buildup of rust and scale and / or shorten engine life.
- Prevent dirt and debris from contaminating the engine coolant. Carefully clean the radiator cap and the surrounding area before you remove the cap.
- NEVER mix different types of engine coolants. This may adversely affect the properties of the engine coolant.

0000006en

CAUTION

Identify all parts and their location using an appropriate method. It is important that all parts are returned to the same position during the reassembly process.

0000080en

CAUTION

Any part which is found defective as a result of inspection or any part whose measured value does not satisfy the standard or limit must be replaced.

0000119en

CAUTION

Any part determined to not meet the service standard or limit before the next service, as determined from the state of current rate of wear, should be replaced even though the part currently meets the service standard limit.

0000120en

CAUTION

Remove or install the high-pressure fuel injection lines as an assembly whenever possible. Disassembling the high-pressure fuel injection lines from the retainers or bending any of the fuel lines will make it difficult to reinstall the fuel lines.

0000047en

CAUTION

Do not loosen or remove the four bolts retaining the fuel injection pump drive gear to the fuel injection pump hub. Do not disassemble the fuel injection pump drive gear from the hub. Correct fuel injection timing will be very difficult or impossible to achieve.

0000031en

CAUTION

Keep the piston pin parts, piston assemblies, and connecting rod assemblies together to be returned to the same position during the reassembly process. Label the parts using an appropriate method.

0000088en

CAUTION

Do not allow the honing tool to operate in one position for any length of time. Damage to the cylinder wall will occur. Keep the tool in constant up-and-down motion.

0000090en

INTRODUCTION

This section of the *Service Manual* describes servicing of the engine.

CYLINDER HEAD SPECIFICATIONS

Adjustment Specifications

Model	Valve Clearance	Valve Bridge Clearance (4-Valve Head Only)
All except 4TNV106, 4TNV106T	0.006 - 0.010 in. (0.15 - 0.25 mm)	0
4TNV106, 4TNV106T	0.010 - 0.014 in. (0.25 - 0.35 mm)	0

Cylinder Head

Inspection Item			Standard	Limit	Reference Page
Combustion Surface Distortion (Flatness)			0.0020 in. (0.05 mm) or less	0.0059 in. (0.15 mm)	*See Valve Recession on page 6-42 and 6-58.*
Valve Recession	3TNV82A (2-Valve Head)	Intake	0.0138 - 0.0217 in. (0.35 - 0.55 mm)	0.0315 in. (0.8 mm)	
		Exhaust	0.0118 - 0.0197 in. (0.30 - 0.50 mm)	0.0315 in. (0.8 mm)	
	3TNV84, 3TNV84T, 3TNV88, 4TNV84, 4TNV84T, 4TNV88 (2-Valve Head) 4TNV84T (4-Valve Head)	Intake	0.0118 - 0.0197 in. (0.30 - 0.50 mm)	0.0315 in. (0.8 mm)	
		Exhaust	0.0118 - 0.0197 in. (0.30 - 0.50 mm)	0.0315 in. (0.8 mm)	
	4TNV94L, 4TNV98, 4TNV98T (4-Valve Head)	Intake	0.0142 - 0.0220 in. (0.36 - 0.56 mm)	0.0315 in. (0.8 mm)	
		Exhaust	0.0138 - 0.0217 in. (0.35 - 0.55 mm)	0.0315 in. (0.8 mm)	
	4TNV106, 4TNV106T (4-Valve Head)	Intake	0.0197 - 0.0276 in. (0.50 - 0.70 mm)	0.0394 in. (1.0 mm)	
		Exhaust	0.0276 - 0.0354 in. (0.70 - 0.90 mm)	0.0472 in. (1.2 mm)	
Valve Seat (2-Valve, 4-Valve)	Seat Angle	Intake	120°	-	*See Valve Face and Valve Seat on page 6-43 and 6-59.*
		Exhaust	90°	-	
	Seat Correction Angle		40°, 150°	-	

Intake / Exhaust Valve and Guide

Inspection Item			Standard	Limit	Reference Page
3TNV82A (2-Valve Head)	Intake	Guide Inside Diameter	0.2756 - 0.2762 in. (7.000 - 7.015 mm)	0.2787 in. (7.08 mm)	*See Inspection of Valve Guides on page 6-41.*
		Valve Stem Outside Diameter	0.2734 - 0.2740 in. (6.945 - 9.960 mm)	0.2717 in. (6.90 mm)	
		Valve Stem Bend	0.0016 - 0.0028 in. (0.040 - 0.070 mm)	0.0071 in. (0.18 mm)	
	Exhaust	Guide Inside Diameter	0.2756 - 0.2762 in. (7.000 - 7.015 mm)	0.2787 in. (7.08 mm)	
		Valve Stem Outside Diameter	0.2732 - 0.2754 in. (6.940 - 6.955 mm)	0.2717 in. (6.90 mm)	
		Valve Stem Bend	0.0018 - 0.0030 in. (0.045 - 0.075 mm)	0.0071 in. (0.18 mm)	
4TNV84, 3TNV84, 3TNV84T, 4TNV88, 4TNV88 (2-Valve Head)	Intake	Guide Inside Diameter	0.3154 - 0.3159 in. (8.010 - 8.025 mm)	0.3189 in. (8.10 mm)	*See Inspection of Valve Guides on page 6-41.*
		Valve Stem Outside Diameter	0.3132 - 0.3140 in. (7.955 - 7.975 mm)	0.3110 in. (7.90 mm)	
		Valve Stem Bend	0.0014 - 0.0028 in. (0.035 - 0.070 mm)	0.0071 in. (0.18 mm)	
	Exhaust	Guide Inside Diameter	0.3156 - 0.3161 in. (8.015 - 8.030 mm)	0.3189 in. (8.10 mm)	
		Valve Stem Outside Diameter	0.3132 -.3134 in. (7.955 - 7.960 mm)	0.3110 in. (7.90 mm)	
		Valve Stem Bend	0.0018 - 0.0030 in. (0.045 - 0.075 mm)	0.0071 in. (0.18 mm)	
4TNV84T (4-Valve Head)	Intake	Guide Inside Diameter	0.2362 - 0.2368 in. (6.000 - 6.015 mm)	0.2394 in. (6.08 mm)	*See Inspection of Valve Guides on page 6-41.*
		Valve Stem Outside Diameter	0.2346 - 0.2352 in. (5.960 - 5.975 mm)	0.2323 in. (5.90 mm)	
		Valve Stem Bend	0.0010 - 0.0022 in. (0.025 - 0.055 mm)	0.0059 in. (0.15 mm)	
	Exhaust	Guide Inside Diameter	0.2362 - 0.2368 in. (6.000 - 6.015 mm)	0.2394 in. (6.08 mm)	
		Valve Stem Outside Diameter	0.2341 - 0.2346 in. (5.945 - 5.960 mm)	0.2323 in. (5.90 mm)	
		Valve Stem Bend	0.0016 - 0.0028 in. (0.040 - 0.070 mm)	0.0067 in. (0.17 mm)	

(Intake / Exhaust Valve and Guide Cont.)

Inspection Item			Standard	Limit	Reference Page
4TNV94L 4TNV98, 4TNV98T (4-Valve Head)	Intake	Guide Inside Diameter	0.2756 - 0.2762 in. (7.000 - 7.015 mm)	0.2787 in. (7.08 mm)	*See Inspection of Valve Guides on page 6-41.*
		Valve Stem Outside Diameter	0.2734 - 0.2740 in. (6.945 - 6.960 mm)	0.2717 in. (6.90 mm)	
		Oil Clearance	0.0016 - 0.0028 in. (0.040 - 0.070 mm)	0.0067 in. (0.17 mm)	
	Exhaust	Guide Inside Diameter	0.2756 - 0.2762 in. (7.000 - 7.015 mm)	0.2787 in. (7.08 mm)	
		Valve Stem Outside Diameter	0.2732 - 0.2738 in. (6.940 - 6.955 mm)	0.2717 in. (6.90 mm)	
		Valve Stem Bend	0.0018 - 0.0030 in. (0.045 - 0.075 mm)	0.0067 in. (0.17 mm)	
4TNV106T (4-Valve Head)	Intake	Guide Inside Diameter	0.2759 - 0.2764 in. (7.008 - 7.020 mm)	0.2787 in. (7.08 mm)	*See Inspection of Valve Guides on page 6-41.*
		Valve Stem Outside Diameter	0.2734 - 0.2740 in. (6.945 - 6.960 mm)	0.2724 in. (6.92 mm)	
		Valve Stem Bend	0.0019 - 0.0030 in. (0.048 - 0.075 mm)	0.0063 in. (0.16 mm)	
	Exhaust	Guide Inside Diameter	0.2759 - 0.2764 in. (7.008 - 7.020 mm)	0.2787 in. (7.08 mm)	
		Valve Stem Outside Diameter	0.2740 - 0.2746 in. (6.960 - 6.975 mm)	0.2717 in. (6.90 mm)	
		Valve Stem Bend	0.0013 - 0.0024 in. (0.033 - 0.060 mm)	0.0071 in. (0.18 mm)	
Valve Guide Projection From Cylinder Head		3TNV82A	0.4606 - 0.4724 in. (11.70 - 12.00 mm)	-	*See Reassembly of Valve Guides on page 6-44 and 6-61.*
		3TNV84, 3TNV84T, 4TNV84, 4TNV88	0.5791 -0.5905 in. (14.71 - 15.00 mm)	-	
		4TNV84T	0.3228 - 0.3346 in. (8.20 - 8.50 mm)	-	
		4TNV94L, 4TNV98, 4TNV98T	0.3819 - 0.3937 in. (9.70 - 10.00 mm)	-	
		4TNV106, 4TNV106T	0.5276 - 0.5354 in. (13.40 - 13.60 mm)	-	
Valve Guide Installation Method			Cold-fitted	-	

Inspection Item		Standard	Limit	Reference Page
Valve Stem Seal Projection From Cylinder Head				*See Reassembly of Intake and Exhaust Valves on page 6-45.*
2 Valves	3TNV82A	0.618 - 0.629 in. (15.7 - 16.0 mm)	-	
	4TNV84	0.736 - 0.748 in. (18.7 - 19.0 mm)	-	
	3TNV84 (T)		-	
	4TNV88		-	
4 Valves	4TNV84T	0.389 - 0.401 in. (9.9 - 10.2 mm)	-	
	4TNV94L	0.460 - 0.472 in. (11.7 - 12.0 mm)	-	
	4TNV98 (T)		-	
	4TNV106 (T)	0.606 - 0.614 in. (15.4 - 15.6 mm)	-	

Push Rod

Inspection Item	Standard	Limit	Reference Page
Push Rod Bend - All Models	Less than 0.0012 in. (0.03 mm)	0.0012 in. (0.03 mm)	*See Push Rod Bend on page 6-41 and 6-56.*

Rocker Arm and Shaft

Model	Inspection Item	Standard	Limit	Reference Page
3TNV82A, 3TNV84, 3TNV84T, 3TNV88, 4TNV84, 4TNV84T, 4TNV88	Arm Shaft Hole Diameter	0.6299 - 0.6307 in. (16.000 - 16.020 mm)	0.6327 in. (16.07 mm)	*See Inspection of Rocker Arm Assembly on page 6-41 and 6-56.*
	Shaft Outside Diameter	0.6286 - 0.6293 in. (15.966 - 15.984 mm)	0.6276 in. (15.94 mm)	
	Oil Clearance	0.0006 - 0.0021 in. (0.016 - 0.054 mm)	0.0051 in. (0.13 mm)	
4TNV94L, 4TNV98, 4TNV98T, 4TNV106, 4TNV106T	Arm Shaft Hole Diameter	0.7283 - 0.7291 in. (18.500 - 18.520 mm)	0.7311 in. (18.57 mm)	
	Shaft Outside Diameter	0.7272 - 0.7280 in. (18.470 - 18.490 mm)	0.7260 in. (18.44 mm)	
	Oil Clearance	0.0004 - 0.0020 in. (0.010 - 0.050 mm)	0.0051 in. (0.13 mm)	

Valve Spring

Inspection Item	Model	Standard	Limit	Reference Page
Free Length	3TNV82A (2-Valve Head)	1.7480 in. (44.4 mm)	1.7283 in. (43.9 mm)	*See Inspection of Valve Springs on page 6-44 and 6-60.*
	4TNV84, 3TNV84, 3TNV84T, 4TNV88 (2-Valve Head)	1.6535 in. (42.0 mm)	1.6339 in. (41.5 mm)	
	4TNV84T (4-Valve Head)	1.4724 in. (37.4 mm)	1.4528 in. (36.9 mm)	
	4TNV94L, 4TNV98, 4TNV98T (4-Valve Head)	1.5630 in. (39.7 mm)	1.5433 in. (39.2 mm)	
	4TNV106, 4TNV106T (4-Valve Head)	1.9921 in. (50.6 mm)	1.9724 in. (50.1 mm)	
Squareness	3TNV82A (2-Valve Head)	-	0.0551 in. (1.4 mm)	
	4TNV84, 3TNV84, 3TNV84T, 4TNV88 (2-Valve Head)	-	0.0551 in. (1.4 mm)	
	4TNV84T (4-Valve Head)	-	0.0551 in. (1.3 mm)	
	4TNV94L, 4TNV98, 4TNV98T (4-Valve Head)	-	0.0551 in. (1.4 mm)	
	4TNV106, 4TNV106T (4-Valve Head)	-	0.0551 in. (1.5 mm)	

CAMSHAFT AND TIMING GEAR TRAIN SPECIFICATIONS

Camshaft

Inspection Item			Standard	Limit	Reference Page
End Play			0.0020 - 0.0079 in. (0.05 - 0.20 mm)	0.0118 in. (0.030 mm)	*See Removal of Camshaft on page 6-76.*
Bend (1/2 the dial gauge reading)			0 - 0.0008 in. (0 - 0.02 mm)	0.0020 in. (0.05 mm)	*See Inspection of Camshaft on page 6-87.*
Cam Lobe Height		3TNV82A, 3TNV84, 3TNV84T, 3TNV88, 4TNV84, 4TNV84T, 4TNV88	1.5197 - 1.5276 in. (38.600 - 38.800 mm)	1.5098 in. (38.350 mm)	
		4TNV94L, 4TNV98, 4TNV98T	1.7087 - 1.7165 in. (43.400 - 43.600 mm)	1.6988 in. (43.150 mm)	
		4TNV106, 4TNV106T	2.0039 - 2.0118 in. (50.900 - 51.100 mm)	1.9941 in. (50.650 mm)	
Shaft Outside Diameter / Bearing Inside Diameter					
3TNV82A, 3TNV84, 3TNV84T, 3TNV88, 4TNV84, 4TNV84T, 4TNV88	Gear End	Bushing Inside Diameter	1.7713 - 1.7738 in. (44.990 - 45.055 mm)	1.7768 in. (45.130 mm)	*See Inspection of Camshaft on page 6-87.*
		Camshaft Outside Diameter	1.7687 - 1.7697 in. (44.925 - 44.950 mm)	1.7673 in. (44.890 mm)	
		Oil Clearance	0.0016 - 0.0051 in. (0.040 - 0.130 mm)	0.0094 in. (0.240 mm)	
	Intermediate	Bore Inside Diameter	1.7716 - 1.7726 in. (45.000 - 45.025 mm)	1.7756 in. (45.100 mm)	
		Camshaft Outside Diameter	1.7681 - 1.7691 in. (44.910 - 44.935 mm)	1.7667 in. (44.875 mm)	
		Oil Clearance	0.0026 - 0.0045 in. (0.065 - 0.115 mm)	0.0089 in. (0.225 mm)	
	Flywheel End	Bore Inside Diameter	1.7716 - 1.7726 in. (45.000 - 45.025 mm)	1.7756 in. (45.100 mm)	
		Camshaft Outside Diameter	1.7687 - 1.7697 in. (44.925 - 44.950 mm)	1.7673 in. (44.890 mm)	
		Oil Clearance	0.0020 - 0.0039 in. (0.050 - 0.100 mm)	0.0083 in. (0.210 mm)	

(Camshaft Cont.)

Inspection Item			Standard	Limit	Reference Page
4TNV94L, 4TNV98, 4TNV98T	Gear End	Bushing Inside Diameter	1.9681 - 1.9707 in. (49.990 - 50.055 mm)	1.9736 in. (50.130 mm)	*See Inspection of Camshaft on page 6-87.*
		Camshaft Outside Diameter	1.9655 - 1.9665 in. (49.925 - 49.950 mm)	1.7673 in. (49.890 mm)	
		Oil Clearance	0.0016 - 0.0051 in. (0.040 - 0.130 mm)	0.0094 in. (0.240 mm)	
	Intermediate	Bushing Inside Diameter	1.9685 - 1.9695 in. (50.000 - 50.025 mm)	1.9724 in. (50.100 mm)	
		Camshaft Outside Diameter	1.9650 - 1.9659 in. (49.910 - 49.935 mm)	1.9636 in. (49.875 mm)	
		Oil Clearance	0.0026 - 0.0045 in. (0.065 - 0.115 mm)	0.0089 in; (0.225 mm)	
	Flywheel End	Bushing Inside Diameter	1.9685 - 1.9695 in. (50.000 - 50.025 mm)	1.9724 in. (50.100 mm)	
		Camshaft Outside Diameter	1.9655 - 1.9665 in. (49.925 - 49.950 mm)	1.7673 in. (49.890 mm)	
		Oil Clearance	0.0020 - 0.0039 in. (0.050 - 0.100 mm)	0.0083 in. (0.210 mm)	
4TNV106, 4TNV106T	Gear End	Bushing Inside Diameter	2.2827 - 2.2854 in. (57.980 - 58.050 mm)	2.2876 in. (58.105 mm)	
		Camshaft Outside Diameter	2.2799 - 2.2811 in. (57.910 - 57.940 mm)	2.2785 in. (57.875 mm)	
		Oil Clearance	0.0016 - 0.0055 in. (0.040 - 0.140 mm)	0.0098 in. (0.250 mm)	
	Intermediate	Bushing Inside Diameter	2.2835 - 2.2846 in. (58.000 - 58.030 mm)	2.2876 in. (58.105 mm)	
		Camshaft Outside Diameter	2.2793 - 2.2805 in. (57.895 - 57.925 mm)	2.2779 in. (57.860 mm)	
		Oil Clearance	0.0030 - 0.0053 in. (0.075 - 0.135 mm)	0.0096 in. (0.245 mm)	
	Flywheel End	Bushing Inside Diameter	2.2835 - 2.2846 in. (58.000 - 58.030 mm)	2.2876 in. (58.105 mm)	
		Camshaft Outside Diameter	2.2799 - 2.2811 in. (57.910 - 57.940 mm)	2.2785 in. (57.875 mm)	
		Oil Clearance	0.0020 - 0.0047 in. (0.050 - 0.120 mm)	0.0091 in. (0.230 mm)	

Idler Gear Shaft and Bushing

Inspection Item	Standard	Limit	Reference Page
Shaft Outside Diameter	1.8091 - 1.8100 in. (45.950 - 45.975 mm)	1.8071 in. (45.900 mm)	*See Inspection of Idler Gear and Shaft on page 6-87.*
Bushing Inside Diameter	1.8110 - 4.8120 in. (46.000 - 46.025 mm)	1.8140 in. (46.075 mm)	
Oil Clearance	0.0010 - 0.0030 in. (0.025 - 0.075 mm)	0.0069 in. (0.175 mm)	

Timing Gear Backlash

Model	Inspection Item	Standard	Limit	Reference Page
3TNV82A 3TNV84, 3TNV84T, 3TNV88, 4TNV84, 4TNV84T, 4TNV88	Crank Gear, Cam Gear, Idler Gear, Fuel Injection Pump Gear and PTO Gear	0.0028 - 0.0059 in. (0.07 - 0.15 mm)	0.0067 in. (0.17 mm)	*See Checking Timing Gear Backlash on page 6-73.*
4TNV94L 4TNV98, 4TNV98T, 4TNV106, 4TNV106T	Crank Gear, Cam Gear, Idler Gear, Fuel Injection Pump Gear and PTO Gear	0.0031 - 0.0055 in. (0.08 - 0.14 mm)	0.0063 in. (0.16 mm)	
	Lubricating Oil Pump Gear	0.0035 - 0.0059 in. (0.09 - 0.15 mm)	0.0067 in. (0.17 mm)	
	Balancer Drive Gear (Only for 4TNV106T)	0.0047 - 0.0071 in. (0.12 - 0.18 mm)	0.0079 in. (0.20 mm)	

CRANKSHAFT AND PISTON SPECIFICATIONS

Crankshaft

Note: Check appropriate parts catalog for various sizes of replacement main bearing inserts.

Inspection Item			Standard	Limit	Reference Page
Bend (1/2 the dial gauge reading)			-	0.0008 in. (0.02 mm)	*See Inspection of Crankshaft on page 6-86.*
Connecting Rod Journals	3TNV82A	Journal Outside Diameter	1.6910 - 1.6914 in. (42.952 - 42.962 mm)	1.6891 in. (42.902 mm)	
		Bearing Inside Diameter	1.6929 - 1.6946 in. (43.000 - 43.042 mm)	-	
		Bearing Insert Thickness	0.0585 -.0591 in. (1.487 - 1.500 mm)	-	
		Oil Clearance	0.0015 - 0.0035 in. (0.038 - 0.090 mm)	0.0059 in. (0.150 mm)	
	3TNV84, 3TNV84T, 3TNV88, 4TNV84, 4TNV84T 4TNV88	Journal Outside Diameter	1.8879 - 1.8883 in. (47.952 - 47.962 mm)	1.8859 in. (47.902 mm)	
		Bearing Inside Diameter	1.8898 - 1.8909 in. (48.000 - 48.026 mm)	-	
		Bearing Insert Thickness	0.0587 - 0.0591 in. (1.492 - 1.500 mm)	-	
		Oil Clearance	0.0015 - 0.0029 in. (0.038 - 0.074 mm)	0.0059 in. (0.150 mm)	
	4TNV94L, 4TNV98, 4TNV98T	Journal Outside Diameter	2.2816 - 2.2820 in. (57.952 - 57.962 mm)	2.2796 in. (57.902 mm)	
		Bearing Inside Diameter	2.2835 - 2.2845 in. (58.000 - 58.026 mm)	-	
		Bearing Insert Thickness	0.0587 - 0.0591 in. (1.492 - 1.500 mm)	-	
		Oil Clearance	0.0015 - 0.0029 in. (0.038 - 0.074 mm)	0.0059 in. (0.150 mm)	
	4TNV106, 4TNV106T	Journal Outside Diameter	2.5178 - 2.5182 in. (63.952 - 63.962 mm)	2.5158 in. (63.902 mm)	
		Bearing Inside Diameter	2.5203 - 2.5213 in. (64.016 - 64.042 mm)	-	
		Bearing Insert Thickness	0.0781 - 0.0784 in. (1.984 - 1.992 mm)	-	
		Oil Clearance	0.0021 - 0.0035 in. (0.054 - 0.090 mm)	0.0059 in. (0.150 mm)	

(Crankshaft Cont.)

Inspection Item			Standard	Limit	Reference Page
Main Bearing Journal	3TNV82A	Journal Outside Diameter	1.8485 - 1.8489 in. (46.952 - 46.962 mm)	1.8465 in. (46.902 mm)	*See Inspection of Crankshaft on page 6-86.*
		Bearing Inside Diameter	1.8504 - 1.8516 in. (47.000 - 47.032 mm)	-	
		Bearing Insert Thickness	0.0782 - 0.0787 in. (1.987 - 2.000 mm)	-	
		Oil Clearance	0.0015 - 0.0031 in. (0.038 - 0.080 mm)	0.0059 in. (0.150 mm)	
	3TNV84, 3TNV84T, 3TNV88, 4TNV84, 4TNV84T 4TNV88	Journal Outside Diameter	1.9666-1.9670 in. (49.952-49.962 mm)	1.9646 in. (49.902 mm)	
		Bearing Inside Diameter	1.9685 - 1.9693 in. (50.000 - 50.020 mm)	-	
		Bearing Insert Thickness	0.0785 - 0.0791 in. (1.995 - 2.010 mm)	-	
		Oil Clearance	0.0015 - 0.0027 in. (0.038 - 0.068 mm)	0.0059 in. (0.150 mm)	
	4TNV94L, 4TNV98, 4TNV98T	Journal Outside Diameter	2.5572 - 2.5576 in. (64.952 - 64.962 mm)	2.5552 in. (64.902 mm)	
		Bearing Inside Diameter	2.5590 - 2.5598 in. (65.000 - 65.020 mm)	-	
		Bearing Insert Thickness	0.0785 - 0.0791 in. (1.995 - 2.010 mm)	-	
		Oil Clearance	0.0015 - 0.0027 in. (0.038 - 0.068 mm)	0.0059 in. (0.150 mm)	
	4TNV106, 4TNV106T	Journal Outside Diameter	2.9902 - 2.9906 in. (75.952 - 75.962 mm)	2.9883 in. (75.902 mm)	
		Bearing Inside Diameter	2.9927 - 2.9935 in. (76.014 - 76.034 mm)	-	
		Bearing Insert Thickness	0.0980 - 0.0985 in. (2.488 - 2.503 mm)	-	
		Oil Clearance	0.0020 - 0.0032 in. (0.052 - 0.082 mm)	0.0059 in. (0.150 mm)	

Thrust Bearing

Inspection Item	Standard	Limit	Reference Page
Crankshaft End Play - All Models	0.0051 - 0.0091 in. (0.13 - 0.23 mm)	0.0110 in. (0.28 mm)	*See Removal of Crankshaft on page 6-80.*

Piston

Inspection Item		Standard	Limit	Reference Page
Piston Outside Diameter (Measure at 90° to the Piston Pin.)	3TNV82A	3.2264 - 3.2275 in. (81.950 - 81.980 mm)	3.2246 in. (81.905 mm)	*See Inspection of Pistons, Piston Rings and Wrist Pin on page 6-83.*
	3TNV84, 3TNV84T, 4TNV84, 4TNV84T	3.3047 - 3.3059 in. (83.940 - 83.970 mm)	3.3029 in. (83.895 mm)	
	3TNV88,4TNV88	3.4622 - 3.4634 in. (87.940 - 87.970 mm)	3.4604 in. (87.895 mm)	
	4TNV94L	3.6982 - 3.6994 in. (93.935 - 93.965 mm)	3.6968 in. (93.900 mm)	
	4TNV98, 4TNV98T	3.8555 - 3.8567 in. (97.930 - 97.960 mm)	3.8541 in. (97.895 mm)	
	4TNV106, 4TNV106T	4.1705 - 4.1716 in. (105.930 - 105.960 mm)	4.1685 in. (105.880 mm)	
Piston Diameter Measure Location (Upward From the Bottom of the Piston.)	3TNV82A	0.6299 in. (16 mm)	-	
	3TNV84, 3TNV84T, 4TNV84, 4TNV84T	0.9449 in. (24 mm)	-	
	3TNV88,4TNV88	0.9449 in. (24 mm)	-	
	4TNV94L	0.8661 in. (22 mm)	-	
	4TNV98, 4TNV98T	0.8661 in. (22 mm)	-	
	4TNV106, 4TNV106T	1.1811 in. (30 mm)	-	

(Piston Cont.)

Inspection Item			Standard	Limit	Reference Page
Piston Pin	3TNV82A	Hole Inside Diameter	0.9055 - 0.9059 in. (23.000 - 23.009 mm)	0.9070 in. (23.039 mm)	*See Inspection of Pistons, Piston Rings and Wrist Pin on page 6-83.*
		Pin Outside Diameter	0.9053 - 0.9055 in. (22.995 - 23.000 mm)	0.9041 in. (22.965 mm)	
		Oil Clearance	0.0000 - 0.0006 in. (0.000 - 0.014 mm)	0.0029 in. (0.074 mm)	
	3TNV84, 3TNV84T, 3TNV88, 4TNV84, 4TNV84T 4TNV88	Hole Inside Diameter	1.0236 - 1.0240 in. (26.000 - 26.009 mm)	1.0252 in. (26.039 mm)	
		Pin Outside Diameter	1.0234 - 1.0236 in. (25.995 - 26.000 mm)	1.0222 in. (25.965 mm)	
		Oil Clearance	0.0000 - 0.0006 in. (0.000 - 0.014 mm)	0.0029 in. (0.074 mm)	
	4TNV94L, 4TNV98, 4TNV98T	Hole Inside Diameter	1.1811 - 1.1815 in. (30.000 - 30.009 mm)	1.1826 in. (30.039 mm)	
		Pin Outside Diameter	1.1807 - 1.1811 in. (29.989 - 30.000 mm)	1.1795 in. (29.959 mm)	
		Oil Clearance	0.0000 - 0.0008 in. (0.000 - 0.020 mm)	0.0031 in. (0.080 mm)	
	4TNV106, 4TNV106T	Hole Inside Diameter	1.4567 - 1.4571 in. (37.000 - 37.011 mm)	1.4582 in. (37.039 mm)	
		Pin Outside Diameter	1.4563 - 1.4567 in. (36.989 - 37.000 mm)	1.4551 in. (36.959 mm)	
		Oil Clearance	0.0000 - 0.0009 in. (0.000 - 0.022 mm)	0.0031 in. (0.080 mm)	

Piston Ring

Model	Inspection Item		Standard	Limit	Reference Page
3TNV82A, 3TNV84, 3TNV84T, 4TNV84, 4TNV84T	Top Ring	Ring Groove Width	0.0813 - 0.0819 in. (2.065 - 2.080 mm)	-	*See Inspection of Pistons, Piston Rings and Wrist Pin on page 6-83.*
		Ring Width	0.0776 - 0.0783 in. (1.970 - 1.990 mm)	0.0768 in. (1.950 mm)	
		Side Clearance	0.0030 - 0.0043 in. (0.075 - 0.110 mm)	-	
		End Gap	0.0079 - 0.0157 in. (0.200 - 0.400 mm)	0.0193 in. (0.490 mm)	
	Second Ring	Ring Groove Width	0.0801 - 0.0807 in. (2.035 - 2.050 mm)	0.0846 in. (2.150 mm)	
		Ring Width	0.0776 - 0.0783 in. (1.970 - 1.990 mm)	0.0768 in. (2.150 mm)	
		Side Gap	0.0018 - 0.0031 in. (0.045 - 0.080 mm)	0.0079 in. (0.200 mm)	
		End Gap	0.0079 - 0.0157 in. (0.200 - 0.400 mm)	0.0193 in. (0.490 mm)	
	Oil Ring	Ring Groove Width	0.1581 - 0.1587 in. (4.015 - 4.030 mm)	0.1626 in. (4.130 mm)	
		Ring Width	0.1563 - 0.1571 in. (3.970 - 3.990 mm)	0.01555 in. (3.950 mm)	
		Side Clearance	0.0010 - 0.0024 in. (0.025 - 0.060 mm)	0.0071 in. (0.180 mm)	
		End Gap	0.0079 - 0.0157 in. (0.200 - 0.400 mm)	0.0193 in. (0.490 mm)	

(Piston Ring Cont.)

Model	Inspection Item		Standard	Limit	Reference Page
3TNV88, 4TNV88	Top Ring	Ring Groove Width	0.0811 - 0.0817 in. (2.060 - 2.075 mm)	-	*See Inspection of Pistons, Piston Rings and Wrist Pin on page 6-83.*
		Ring Width	0.0776 - 0.0783 in. (1.970 - 1.990 mm)	0.0768 in. (1.950 mm)	
		Side Clearance	0.0028 - 0.0041 in. (0.070 - 0.105 mm)	-	
		End Gap	0.0079 - 0.157 in. (0.200 -.0400 mm)	0.0193 in. (0.490 mm)	
	Second Ring	Ring Groove Width	0.0797 - 0.0803 in. (2.025 - 2.040 mm)	0.0843 in. (2.140 mm)	
		Ring Width	0.0776 -- 0.0783 in. (1.970 - 1.990 mm)	0.0768 in. (1.950 mm)	
		Side Clearance	0.0014 - 0.0028 in. (0.035 - 0.070 mm)	0.0075 in. (0.190 mm)	
		End Gap	0.0079 - 0.0157 in. (0.200 - 0.400 mm)	0.0193 in. (0.490 mm)	
	Oil Ring	Ring Groove Width	0.1581 - 0.1587 in. (4.015 - 4.030 mm)	0.1626 in. (4.130 mm)	
		Ring Width	0.1563 -.1571 in. (3.970 - 3.990 mm)	0.1555 in. (3.950 mm)	
		Side Clearance	0.0010 - 0.0024 in. (0.025 - 0.060 mm)	0.0071 in. (0.180 mm)	
		End Gap	0.0079 - 0.0157 in. (0.200 - 0.400 mm)	0.0193 in. (0.490 mm)	

(Piston Ring Cont.)

Model	Inspection Item		Standard	Limit	Reference Page
4TNV94L, 4TNV98, 4TNV98T	Top Ring	Ring Groove Width	0.0803 - 0.0811 in. (2.040 - 2.060 mm)	-	*See Inspection of Pistons, Piston Rings and Wrist Pin on page 6-83.*
		Ring Width	0.0764 - 0.0772 in. (1.940 - 1.960 mm)	0.0756 in. (1.920 mm)	
		Side Clearance	0.0031 - 0.0047 in. (0.080 - 0.120 mm)	-	
		End Gap	0.0098 - 0.0177 in. (0.250 - 0.450 mm)	0.0213 in. (0.540 mm)	
	Second Ring	Ring Groove Width	0.0819 - 0.0825 in. (2.080 - 2.095 mm)	0.0864 in. (2.195 mm)	
		Ring Width	0.0776 - 0.0783 in. (1.970 - 1.990 mm)	0.0768 in. (1.950 mm)	
		Side Clearance	0.0035 - 0.0049 in. (0.090 - 0.125 mm)	0.0096 in. (0.245 mm)	
		End Gap	0.0177 - 0.0256 in. (0.450 - 0.650 mm)	0.0287 in. (0.730 mm)	
	Oil Ring	Ring Groove Width	0.1187 - 0.1193 in. (3.015 - 3.030 mm)	0.1232 in. (3.130 mm)	
		Ring Width	0.1169 - 0.1177 in. (2.970 - 2.990 mm)	0.1161 in. (2.950 mm)	
		Side Clearance	0.0010 - 0.0024 in. (0.025 - 0.060 mm)	0.0071 in. (0.180 mm)	
		End Gap	0.0098 - 0.0177 in. (0.250 - 0.450 mm)	0.0217 in. (0.550 mm)	

(Piston Ring Cont.)

Model	Inspection Item		Standard	Limit	Reference Page
4TNV106, 4TNV106T	Top Ring	Ring Groove Width	0.0992 - 0.1000 in. (2.520 - 2.540 mm)	-	*See Inspection of Pistons, Piston Rings and Wrist Pin on page 6-83.*
		Ring Width	0.0961 - 0.0969 in. (2.440 - 2.460 mm)	0.0953 in. (2.420 mm)	
		Side Clearance	0.0024 - 0.0039 in. (0.060 - 0.100 mm)	-	
		End Gap	0.0118 - 0.0177 in. (0.300 - 0.450 mm)	0.0213 in. (0.540 mm)	
	Second Ring	Ring Groove Width	0.0815 - 0.0821 in. (2.070 - 2.085 mm)	0.0860 in. (2.185 mm)	
		Ring Width	0.0776 - 0.0783 in. (1.970 - 1.990 mm)	0.0768 in. (1.950 mm)	
		Side Clearance	0.0031 - 0.0045 in. (0.080 - 0.115 mm)	0.0093 in. (0.235 mm)	
		End Gap	0.0177 - 0.0236 in. (0.450 - 0.600 mm)	0.0268 in. (0.680 mm)	
	Oil Ring	Ring Groove Width	0.1187 - 0.1193 in. (3.015 - 3.030 mm)	0.1232 in. (3.130 mm)	
		Ring Width	0.1169 - 0.1177 in. (2.970 - 2.990 mm)	0.1161 in. (2.950 mm)	
		Side Clearance	0.0010 - 0.0024 in. (0.025 - 0.060 mm)	0.0071 in. (0.180 mm)	
		End Gap	0.0118 - 0.0197 in. (0.300 - 0.500 mm)	0.0236 in. (0.600 mm)	

Connecting Rod

Connecting Rod Small End

Model	Inspection Item	Standard	Limit	Reference Page
3TNV82A	Wrist Pin Bushing Inside Diameter	0.9065 - 0.9070 in. (23.025 - 23.038 mm)	0.9082 in. (23.068 mm)	*See Inspection of Connecting Rod on page 6-85.*
	Wrist Pin Outside Diameter	0.9053 - 0.9055 in. (22.995 - 23.000 mm)	0.9042 in. (22.967 mm)	
	Oil Clearance	0.0010 - 0.0017 in. (0.025 - 0.043 mm)	0.0040 in. (0.101 mm)	
3TNV84, 3TNV84T, 3TNV88, 4TNV84, 4TNV84T, 4TNV88	Wrist Pin Bushing Inside Diameter	1.0234 - 1.0251 in. (26.025 - 26.038 mm)	1.0263 in. (26.068 mm)	
	Wrist Pin Outside Diameter	1.0234 - 1.0236 in. (25.995 - 26.000 mm)	1.0223 in. (25.967 mm)	
	Oil Clearance	0.0010 - 0.0017 in. (0.025 - 0.043 mm)	0.0040 in. (0.101 mm)	
4TNV94L, 4TNV98, 4TNV98T	Wrist Pin Bushing Inside Diameter	1.1821 - 1.1826 in. (30.025 - 30.038 mm)	1.1838 in. (30.068 mm)	
	Wrist Pin Outside Diameter	1.1806 - 1.1811 in. (29.987 - 30.000 mm)	1.1795 in. (29.959 mm)	
	Oil Clearance	0.0010 - 0.0020 in. (0.025 - 0.51 mm)	0.0043 in. (0.109 mm)	
4TNV106, 4TNV106T	Wrist Pin Bushing Inside Diameter	1.4577 - 1.4582 in. (37.025 - 37.038 mm)	1.4594 in. (37.068 mm)	
	Wrist Pin Outside Diameter	1.4563 - 1.4567 in. (36.989 - 37.000 mm)	1.4552 in. (36.961 mm)	
	Oil Clearance	0.0010 - 0.0019 in. (0.025 - 0.049 mm)	0.0042 in. (0.107 mm)	

Connecting Rod Big End

Inspection Item	Standard	Limit	Reference Page
Side Clearance - All Models	0.0079 - 0.0157 in. (0.20 - 0.40 mm)	-	*See Inspection of Connecting Rod on page 6-85.*

See Special Torque Chart on page 6-25 for other specifications.

Tappet

Model	Inspection Item	Standard	Limit	Reference Page
3TNV82A, 3TNV84, 3TNV84T, 3TNV88, 4TNV84, 4TNV84T, 4TNV88	Tappet Bore (Block) Inside Diameter	0.4724 - 0.4734 in. (12.000 - 12.025 mm)	0.4742 in. (12.045 mm)	*See Inspection of Tappets on page 6-85.*
	Tappet Stem Outside Diameter	0.4715 - 0.4720 in. (11.975 - 11.990 mm)	0.4707 in. (11.955 mm)	
	Oil Clearance	0.0004 - 0.0020 in. (0.010 - 0.050 mm)	0.0035 in. (0.090 mm)	
4TNV94L, 4TNV98, 4TNV98T	Tappet Bore (Block) Inside Diameter	0.4724 - 0.4731 in. (12.000 - 12.018 mm)	0.4739 in. (12.038 mm)	
	Tappet Stem Outside Diameter	0.4715 - 0.4720 in. (11.975 - 11.990 mm)	0.4707 in. (11.955 mm)	
	Oil Clearance	0.0004 - 0.0017 in. (0.010 - 0.043 mm)	0.0033 in. (0.083 mm)	
4TNV106, 4TNV106T	Tappet Bore (Block) Inside Diameter	0.5512 - 0.5519 in. (14.000 - 14.018 mm)	0.5527 in. (14.038 mm)	
	Tappet Stem Outside Diameter	0.5498 - 0.5505 in. (13.966 - 13.984 mm)	0.5491 in. (13.946 mm)	
	Oil Clearance	0.0006 - 0.0020 in. (0.015 - 0.052 mm)	0.0036 in. (0.092 mm)	

CYLINDER BLOCK SPECIFICATIONS

Cylinder Block

Inspection Item	Model	Standard	Limit	Reference Page
Cylinder Inside Diameter	3TNV82A	3.2283 - 3.2295 in. (82.000 - 82.030 mm)	3.2362 in. (82.200 mm)	*See Inspection of Cylinder Block on page 6-83.*
	3TNV84, 3TNV84T, 4TNV84, 4TNV84T	3.3071 - 3.3083 in. (84.000 - 84.030 mm)	3.3150 in. (84.200 mm)	
	3TNV88, 4TNV88	3.4646 - 3.4657 in. (88.000 - 88.030 mm)	3.4724 in. (88.200 mm)	
	4TNV94L	3.7008 - 3.7020 in. (94.000 - 94.030 mm)	3.7059 in. (94.130 mm)	
	4TNV98, 4TNV98T	3.8583 - 3.8594 in. (98.000 - 98.030 mm)	3.8634 in. (98.130 mm)	
	4TNV106, 4TNV106T	4.1732 - 4.1744 in. (106.000 - 106.030 mm)	4.1783 in. (106.130 mm)	
Cylinder Bore	Roundness	0.0004 in. (0.01 mm) or less	0.0012 in. (0.03 mm)	
	Taper			

SPECIAL TORQUE CHART

Torque for Bolts and Nuts

Component	Model	Thread Diameter and Pitch	Torque	Lubricating Oil Application (Thread Portion and Seat Surface)
Cylinder Head Bolt	3TNV82A	M9 x 1.25 mm	46 - 49 ft·lb (61.7 - 65.7 N·m; 6.3 - 6.7 kgf·m)	Applied
	3TNV82A, 3TNV84, 3TNV84T, 3TNV88, 4TNV84, 4TNV84T, 4TNV88	M10 x 1.25 mm	63 - 67 ft·lb (85.3 - 91.1 N·m; 8.7 - 9.3 kgf·m)	
	4TNV94L, 4TNV98, 4TNV98T	M11 x 1.25 mm	76 - 83 ft·lb (103.1 - 112.9 N·m; 10.5 - 11.5 kgf·m)	
	4TNV106, 4TNV106T	M13 x 1.5 mm	139 - 146 ft·lb (188.0 - 112.9 N·m; 19.0 - 20.0 kgf·m)	
Connecting Rod Bolt	3TNV82A	M8 x 1.0 mm	27 - 30 ft·lb (37.2 - 41.2 N·m; 3.8 - 4.2 kgf·m)	Applied
	3TNV82A, 3TNV84, 3TNV84T, 3TNV88, 4TNV84, 4TNV84T, 4TNV88	M9 x 1.0 mm	33 - 36 ft·lb (44.1 - 49.0 N·m; 4.5 - 5.0 kgf·m)	
	4TNV94L, 4TNV98, 4TNV98T	M10 x 1.0 mm	40 - 43 ft·lb (53.9 - 58.8 N·m; 5.5 - 6.0 kgf·m)	
	4TNV106, 4TNV106T	M11 x 1.0 mm	58 - 62 ft·lb (78.5 - 83.4 N·m; 8.0 - 8.5 kgf·m)	
Flywheel Bolt	3TNV82A, 3TNV84, 3TNV84T, 3TNV88, 4TNV84, 4TNV84T, 4TNV88	M10 x 1.25 mm	61 - 65 ft·lb (83.3 - 88.2 N·m; 8.5 - 9.0 kgf·m)	Applied
	4TNV94L, 4TNV98, 4TNV98T, 4TNV106, 4TNV106T	M14 x 1.5 mm	137 - 152 ft·lb (186.2 - 205.8 N·m; 19 - 21 kgf·m)	
EPA Flange Bolt	4TNV106, 4TNV106T	M8 x 1.5 mm	83 - 91 ft·lb (113 - 123 N·m; 11.5 - 12.5 kgf·m)	Not Applied

(Torque for Bolts and Nuts Cont.)

Component	Model	Thread Diameter and Pitch	Torque	Lubricating Oil Application (Thread Portion and Seat Surface)
Main Bearing Cap Bolt	3TNV82A	M10 x 1.25 mm	56 - 60 ft·lb (76.4 - 80.4 N·m; 7.8 - 8.2 kgf·m)	Applied
	3TNV84, 3TNV84T, 3TNV88, 4TNV84, 4TNV84T, 4TNV88	M12 x 1.5 mm	69 - 72 ft·lb (93.2 - 98.1 N·m; 9.5 - 10.5 kgf·m)	
	4TNV94L, 4TNV98, 4TNV98T	M11 x 1.25 mm	80 - 87 ft·lb (108.1 - 117.9 N·m; 11.0 - 12.0 kgf·m)	
	4TNV106, 4TNV106T	M14 x 1.5 mm	137 - 152 ft·lb (186.2 - 205.8 N·m; 19 - 21 kgf·m)	
Crankshaft Pulley Bolt	3TNV82A, 3TNV84, 3TNV84T, 3TNV88, 4TNV84, 4TNV84T, 4TNV88	M14 x 1.5 mm	Cast metal (FC300) 62 - 69 ft·lb (83.3 - 93.1 N·m; 8.5 - 9.5 kgf·m)	Applied
			Steel metal (S45C) 83 - 91 ft·lb (112.7 - 122.7 N·m; 11.5 - 12.5 kgf·m)	
	4TNV94L, 4TNV98, 4TNV98T, 4TNV106, 4TNV106T	M14 x 1.5 mm	80 - 94 ft·lb (107.9 - 127.5 N·m; 11.0 - 13.0 kgf·m)	
Fuel Injector Bolt	3TNV82A, 3TNV84, 3TNV84T, 3TNV88, 4TNV84, 4TNV84T, 4TNV88	M8 x 1.25 mm	18 - 21 ft·lb (24.4 - 28.4 N·m; 2.5 - 2.9 kgf·m)	Not Applied
	4TNV94L, 4TNV98, 4TNV98T, 4TNV106, 4TNV106T	M8 x 1.25 mm	17 - 21 ft·lb (22.6 - 28.4 N·m; 2.3 - 2.9 kgf·m)	
Fuel Pump Drive Gear Nut	3TNV82A, 3TNV84, 3TNV84T, 3TNV88, 4TNV84, 4TNV84T, 4TNV88	M14 x 1.5 mm	58 - 65 ft·lb (78 - 88 N·m; 8 - 9 kgf·m)	Not Applied
	4TNV94L, 4TNV98, 4TNV98T, 4TNV106, 4TNV106T	M18 x 1.5 mm	83 - 90 ft·lb (113 - 123 N·m; 11.5 - 12.5 kgf·m)	
High-Pressure Fuel Lines Bolt	3TNV82A, 3TNV84, 3TNV84T, 3TNV88, 4TNV84, 4TNV84T, 4TNV88	M12 x 1.5 mm	22 - 25 ft·lb (29.4 - 34.3 N·m; 3.0 - 3.5 kgf·m)	Not Applied
	4TNV94L, 4TNV98, 4TNV98T, 4TNV106, 4TNV106T	M12 x 1.5 mm	174 - 217 in·lb (19.6 - 24.5 N·m; 2.0 - 2.5 kgf·m)	

(Torque for Bolts and Nuts Cont.)

Component	Model	Thread Diameter and Pitch	Torque	Lubricating Oil Application (Thread Portion and Seat Surface)
Fuel Return Line Joint Bolt	4TNV94L, 4TNV98, 4TNV98T, 4TNV106, 4TNV106T	M6 x 1.0 mm	70 - 86 in·lb (7.8 - 9.8 N·m; 0.8 - 1.0 kgf·m)	Not Applied
Rocker Arm Cover Bolt	4TNV106, 4TNV106T	M8 x 1.25 mm	148 - 199 in·lb (16.7 - 22.5 N·m; 1.7 - 2.3 kgf·m)	Not Applied
Glow Plug	3TNV82A-B, 3TNV88-B,-U, 4TNV88-B,-U	M10 x 1.25 mm	133 - 177 in·lb (15 - 20 N·m 1.53 - 2.04 kgf·m)	Not Applied
Glow Connector Nut	3TNV82A-B, 3TNV88-B,-U, 4TNV88-B,-U	M4 x 0.7 mm	9 - 13 in·lb (1 - 1.5 N·m)	Not Applied

See Tightening Torques for Standard Bolts and Nuts on page 4-46 for standard hardware torque values.

SPECIAL SERVICE TOOLS

No.	Tool Name	Applicable Model and Tool Size					Illustration
1	Valve Guide Tool (For Removing Valve Guide)	Model	L1	L2	d1	d2	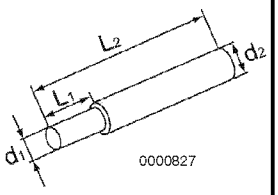
		3TNV82A 4TNV94L, 4TNV98, 4TNV98T 4TNV106, 4TNV106T	0.787 in. (20 mm)	2.953 in. (75 mm)	0.256 in. (6.5 mm)	0.394 in. (10 mm)	
		3TNV84, 4TNV84, 3TNV84T, 4TNV84T, 3TNV88, 4TNV88	0.787 in. (20 mm)	2.953 in. (75 mm)	0.295 in. (7.5 mm)	0.433 in. (11 mm)	
		Locally Manufactured					
2	Valve Guide Tool (For Installing Valve Guide)	Model	L1	L2	d1	d2	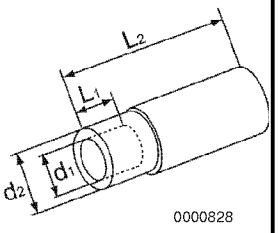
		3TNV82A	0.472 in. (12 mm)	2.362 in. (60 mm)	0.512 in. (13 mm)	0.748 in. (19 mm)	
		3TNV84, 4TNV84, 3TNV84T, 4TNV84T, 3TNV88, 4TNV88	0.591 in. (15 mm)	2.559 in. (65 mm)	0.551 in. (14 mm)	0.787 in. (20 mm)	
		4TNV94L, 4TNV98, 4TNV98T	0.276 in. (7 mm)	2.362 in. (60 mm)	0.512 in. (13 mm)	0.630 in. (16 mm)	
		4TNV106, 4TNV106T	0.535 in. (13.6 mm)	2.559 in. (65 mm)	0.512 in. (13 mm)	0.630 in. (16 mm)	
		Locally Manufactured					
3	Fuel Injector Removal Tool (2-Valve Head)	Yanmar Part No. 129470-92305					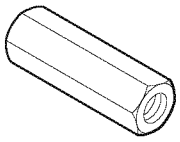

(Special Service Tools Cont.)

No.	Tool Name	Applicable Model and Tool Size					Illustration
4	Connecting Rod Bushing Replacer (For Removal/ Installation of Connecting Rod Bushing)	Model	L1	L2	d1	d2	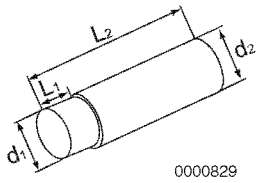
		3TNV82A	0.984 in. (25 mm)	3.346 in. (85 mm)	0.906 in. (23 mm)	1.024 in. (26 mm)	
		3TNV84, 3TNV84T, 3TNV88, 4TNV84, 4TNV84T, 4TNV88,	0.787 in. (20 mm)	3.937 in. (100 mm)	1.024 in. (26 mm)	1.142 in. (29 mm)	
		4TNV94L, 4TNV98, 4TNV98T	0.787 in. (20 mm)	3.937 in. (100 mm)	1.181 in. (30 mm)	1.299 in. (33 mm)	
		4TNV106, 4TNV106T	0.787 in. (20 mm)	3.937 in. (100 mm)	1.457 in. (37 mm)	1.575 in. (40 mm)	
		Locally Manufactured					
5	Valve Spring Compressor (For Removal/ Installation of Valve Spring)	Yanmar Part No. 129100-92630					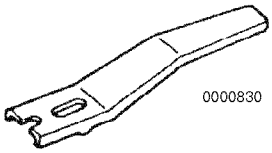
6	Stem Seal Installer (for Installing Valve Stem Seal)	Model	d1	d2	d3	L1	L2	L3
		3TNV82A	0.598 in. (15.2 mm)	0.827 in. (21 mm)	0.472 in. (12 mm)	0.622 in. (15.8 mm)	2.559 in. (65 mm)	0.157 in. (4 mm)
		3TNV84, 3TNV84T, 3TNV88, 4TNV84, 4TNV84T, 4TNV88	0.638 in. (16.2 mm)	0.866 in. (22 mm)	0.531 in. (13.5 mm)	0.740 in. (18.8 mm)	2.559 in. (65 mm)	0.157 in. (4 mm)
		4TNV94L, 4TNV98, 4TNV98T	0.598 in. (15.2 mm)	0.827 in. (21 mm)	0.472 in. (12 mm)	0.465 in. (11.8 mm)	2.559 in. (65 mm)	0.157 in. (4 mm)
		4TNV106, 4TNV106T	0.598 in. (15.2 mm)	0.827 in. (21 mm)	0.472 in. (12 mm)	0.610 in. (15.5 mm)	2.559 in. (65 mm)	0.157 in. (4 mm)
		Locally Manufactured						

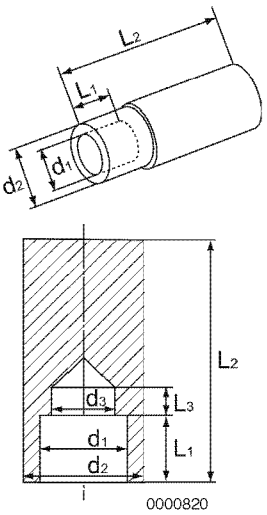

(Special Service Tools Cont.)

No.	Tool Name	Applicable Model and Tool Size	Illustration
7	Filter Wrench (For Removal / Installation of Engine Oil Filter)	Available Locally	0000821
8	Camshaft Bushing Tool (For Extracting Camshaft Bushing)		0000822

Model	L1	L2	d1	d2
3TNV82A, 3TNV84, 3TNV84T, 3TNV88, 4TNV84, 4TNV84T, 4TNV88	0.709 in. (18 mm)	2.756 in. (70 mm)	1.772 in. (45 mm)	1.890 in. (48 mm)
4TNV94L, 4TNV98, 4TNV98T	0.709 in. (18 mm)	2.756 in. (70 mm)	1.968 in. (50 mm)	2.087 in. (553 mm)
4TNV106, 4TNV106T	0.709 in. (18 mm)	2.756 in. (70 mm)	2.283 in. (58 mm)	2.402 in. (61 mm)
Allowance: d1 d2				
Locally Manufactured				

Model	Yanmar Part No.	Cylinder Bore
3TNV82A	129400-92420	3.071 - 3.307 in. (78 - 84 mm)
3TNV88, 4TNV88, 4TNV94L	129400-92430	3.268 - 3.740 in. (83 - 95 mm)
4TNV98	129400-92440	3.504 - 3.976 in. (89 - 101 mm)
4TNV106, 4TNV106T	129400-92450	3.740 - 4.252 in. (95 - 108 mm)

9	Flex-Hone (For Preparation of Cylinder Walls)		0000823
10	Piston Ring Compressor (For Installing Piston)	Yanmar Part No. 95550-002476 The Piston Insertion Tool is Applicable for 2.362 - 4.921 in. (60 - 125 mm) Diameter Pistons	0000824
11	Piston Ring Expander (For Removal / Installation of Piston Ring)	Available Locally	0000825

(Special Service Tools Cont.)

No.	Tool Name	Applicable Model and Tool Size		Illustration
12	Crankshaft Pulley Installing Tool (For taper pilot)	Locally Manufactured (4TNV94L, 4TNV98(T) series) (Knurl knob (1))	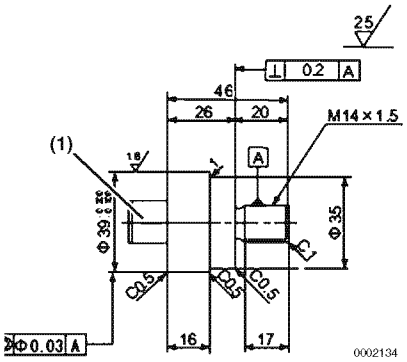	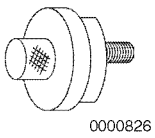
13	Crankshaft Pulley Installing Tool (For straight pilot)	Locally Manufactured (4TNV94L, 4TNV98(T) series)	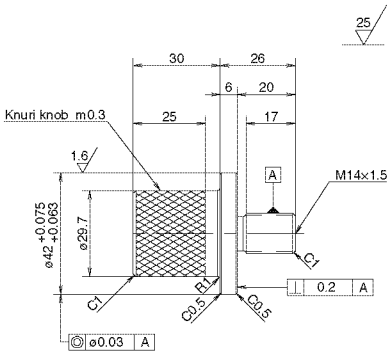	
14	Pulley Installing Tool	3TNV82A - 4TNV88 For all series	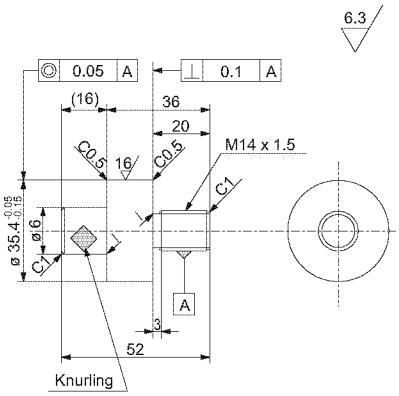	

MEASURING INSTRUMENTS

No.	Instrument Name		Application	Illustration
1	Dial Indicator	Locally Available	Measure shaft bend and end play	0000831
2	Test Indicator	Locally Available	Measurements of narrow or deep portions that cannot be measured by dial gauge	0000832
3	Magnetic Stand	Locally Available	For holding the dial gauge when measuring	0000833
4	Micrometer	Locally Available	For measuring the outside diameters of crankshaft, pistons, piston pins, etc.	0000834
5	Cylinder Bore Gauge	Locally Available	For measuring the inside diameters of cylinder liners, bearing bores, etc.	0000835
6	Calipers	Locally Available	For measuring outside diameters, depth, thickness and width	0000836
7	Depth Micrometer	Locally Available	For measuring of valve recession	0000837
8	Square	Locally Available	For measuring valve spring inclination and straightness of parts	0000838

No.	Instrument Name		Application	Illustration
9	V-Block	Locally Available	For measuring shaft bend	0000839
10	Torque Wrench	Locally Available	For tightening nuts and bolts to the specified torque	0000840
11	Feeler Gauge	Locally Available	For measuring piston ring gaps, piston ring clearance, and valve adjustment clearance	0000841

2-VALVE CYLINDER HEAD

2-Valve Cylinder Head Components

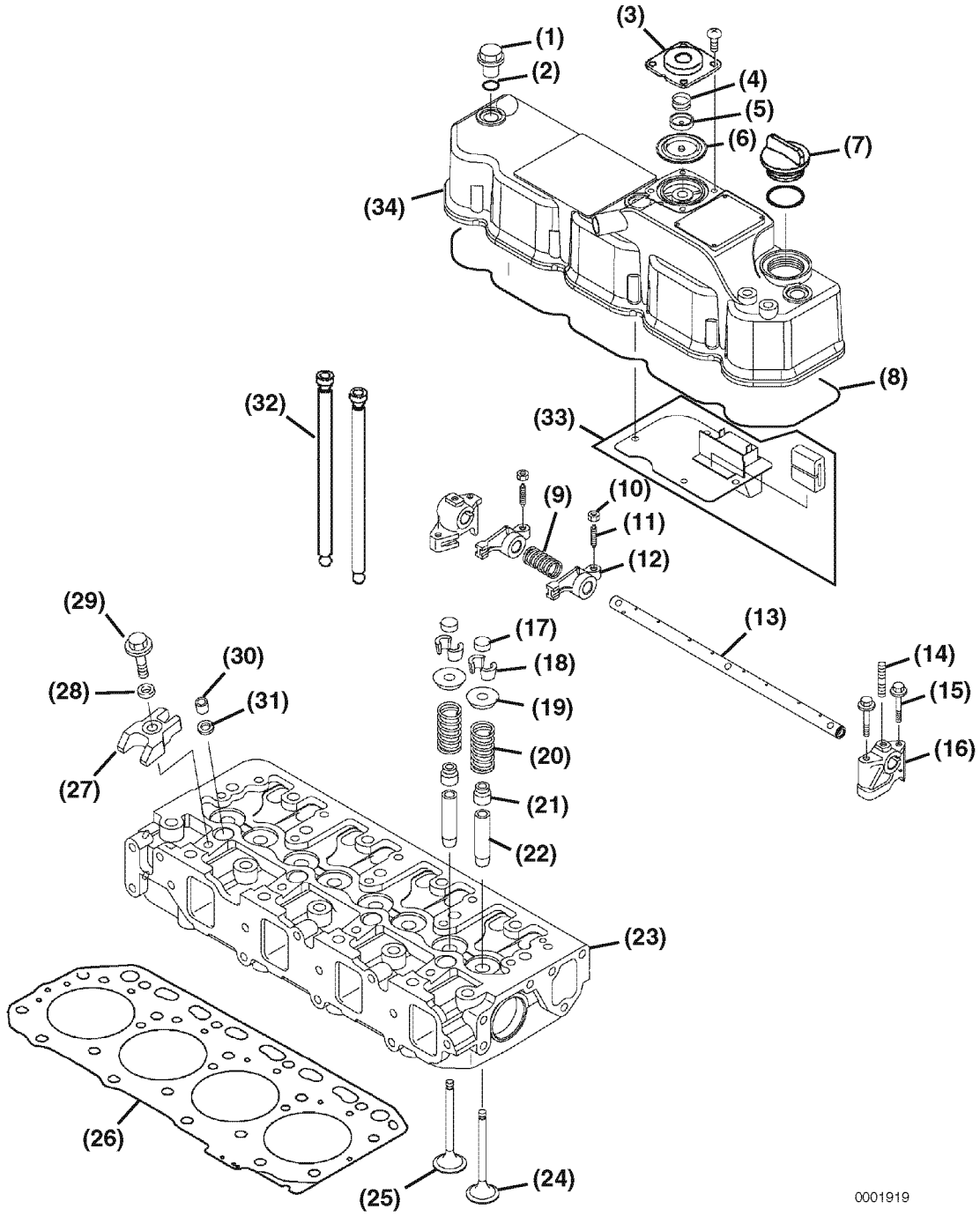

Figure 6-1

1 – Valve Cover Nut
2 – Valve Cover Nut O-Ring
3 – Crankcase Breather Cover
4 – Diaphragm Spring
5 – Diaphragm Plate
6 – Crankcase Breather Diaphragm (non-turbocharged engines only)
7 – Oil Fill Cap
8 – Valve Cover Gasket
9 – Rocker Arm Shaft Spring
10 – Valve Adjusting Screw Lock Nut
11 – Valve Adjusting Screw
12 – Rocker Arm
13 – Rocker Arm Shaft
14 – Rocker Arm Shaft Aligning Stud
15 – Support Bolt
16 – Rocker Arm Shaft Support
17 – Valve Cap
18 – Valve Keepers
19 – Spring Retainer
20 – Valve Spring
21 – Valve Stem Seal
22 – Valve Guide
23 – Cylinder Head
24 – Intake Valve
25 – Exhaust Valve
26 – Cylinder Head Gasket
27 – Fuel Injector Retainer
28 – Washer
29 – Fuel Injector Retainer Bolt
30 – Fuel Injector Nozzle Protector
31 – Fuel Injector Nozzle Seat
32 – Push Rod
33 – Crankcase Breather Components
34 – Valve Cover

Components of a two-valve cylinder head

Cylinder head with glow plugs (two-valve type)Applicable Model
3TNV82A-B, 3TNV88-B,-U, 4TNV88-B,-U

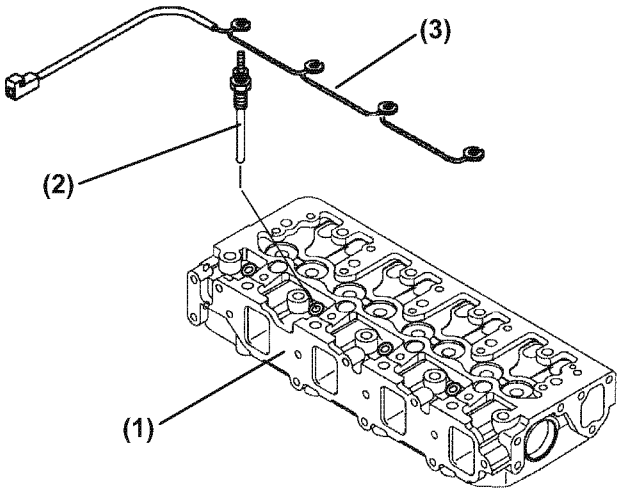

Figure 6-2

1 – Cylinder Head
2 – Glow plug
3 – Harness, Glow plug

Disassembly of 2-Valve Cylinder Head

Prepare a clean, flat working surface on a workbench large enough to accommodate the cylinder head assembly. Discard all gaskets, O-rings and seals. Use new gaskets, O-rings and seals on reassembly of the cylinder head.

1. Drain the coolant from the engine into a suitable container. *See Drain, Flush and Refill Cooling System With New Coolant on page 5-36.*

CAUTION

Identify all parts and their location using an appropriate method. It is important that all parts are returned to the same position during the reassembly process.

0000080en

2. Disconnect the electrical wire from the intake air heater **(Figure 6-3, (1))**.

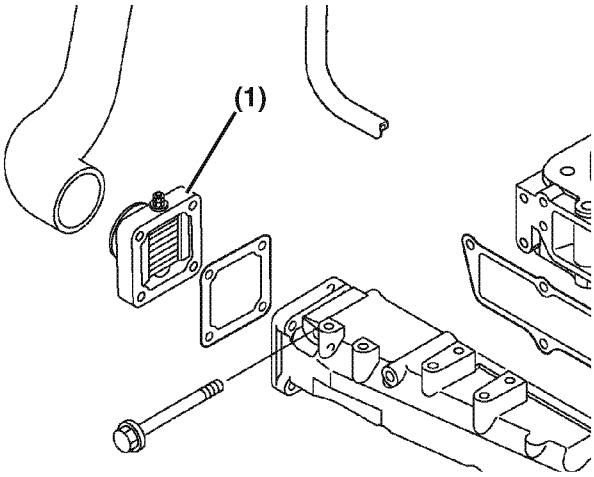

Figure 6-3

3. Disconnect the coolant hoses from the cold start device **(Figure 6-4, (1))** on the fuel injection pump.

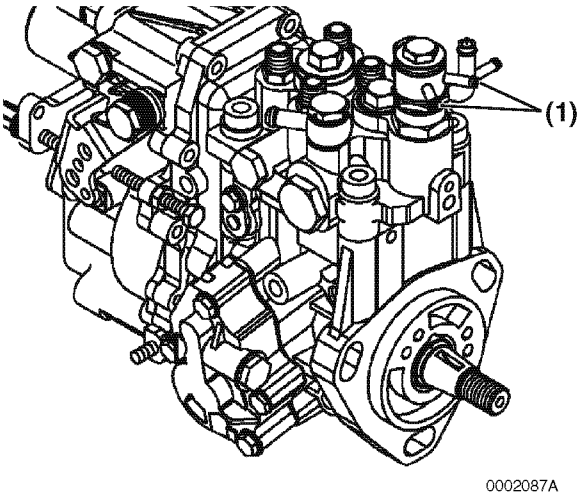

Figure 6-4

4. Remove the intake manifold bolts **(Figure 6-5, (1))**. Remove the intake manifold **(Figure 6-5, (2))**. Discard the intake manifold gasket **(Figure 6-5, (3))**.

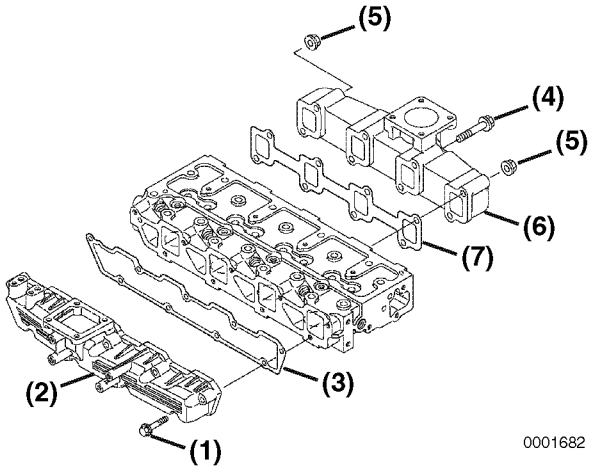

Figure 6-5

5. Remove the exhaust manifold bolts **(Figure 6-5, (4))** and nuts **(Figure 6-5, (5))**. Remove the exhaust manifold **(Figure 6-5, (6))** and the exhaust manifold gasket **(Figure 6-5, (7))**.
6. Remove the coolant pump. *See Disassembly of Engine Coolant Pump on page 8-10.*
7. Remove the high-pressure lines and fuel injectors from the cylinder head. *See Removal of Fuel Injectors on page 7-35.*

Removing the glow plugs

1. Remove the glow plug harness **(Figure 6-6, (2))** from each glow plug **(Figure 6-6, (1))**.
2. Remove the glow plug from the cylinder head.

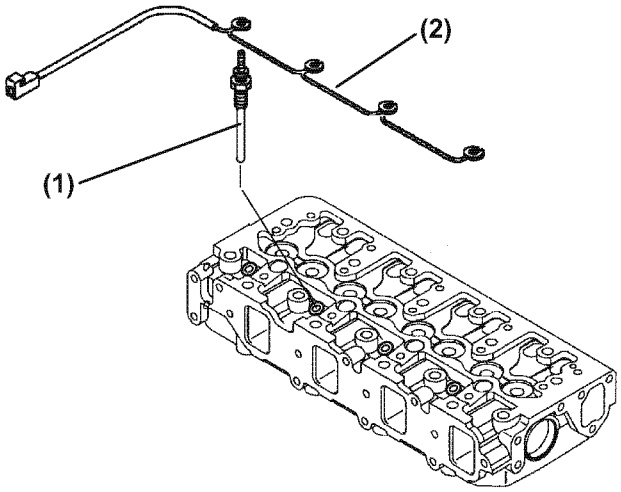

Figure 6-6

Note: Removing the cylinder head from the engine requires that the glow plugs be removed in advance.
Failure to remove the glow plugs in advance could result in damages to the glow plugs because their tips are protruding from the cylinder head combustion chamber surface.

Removal of Valve Cover

1. Remove the valve cover nuts **(Figure 6-7, (1))**.
2. Remove the O-ring **(Figure 6-7, (2))** on each valve cover nut.

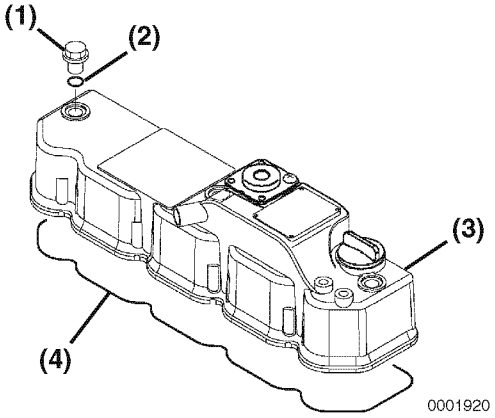

Figure 6-7

3. Remove the valve cover **(Figure 6-7, (3))** and the valve cover gasket **(Figure 6-7, (4))**.

Removal of Rocker Arm Assembly

1. Remove the bolts **(Figure 6-8, (1))** that retain the rocker arm shaft supports.
2. Remove the rocker arm shaft assembly from the cylinder head.

Note: Identify the push rods so they can be reinstalled in their original locations.

3. Remove the push rods and identify for installation.

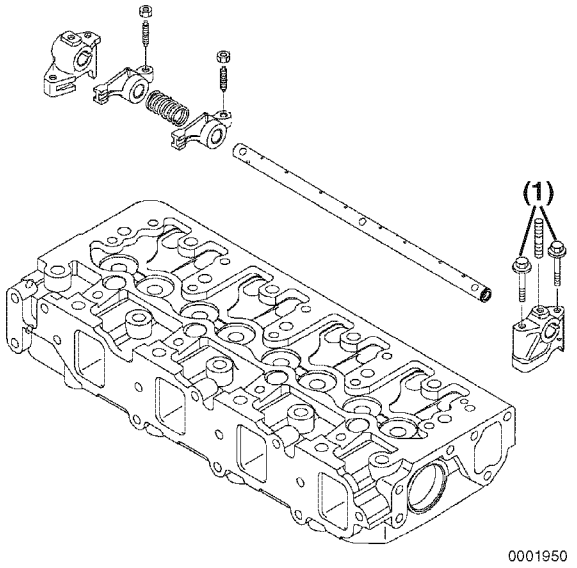

Figure 6-8

Disassembly of Rocker Arm Assembly

1. Remove the rocker arm shaft alignment stud **(Figure 6-9, (4))** from support **(Figure 6-9, (5))**.

Note: The rocker arm shaft fits tightly in the rocker arm supports. Clamp the support in a padded vise. Twist and pull out on the rocker arm shaft to remove. Reverse this process when you reinstall the rocker arm shaft into the supports.

2. Slide the rocker arm shaft **(Figure 6-9, (3))** out of the rocker arm supports **(Figure 6-9, (5))**, springs **(Figure 6-9, (1)),** and rocker arms **(Figure 6-9, (2))**.

Note: Mark the rocker arms so they can be reinstalled with the original matching valve and pushrod.

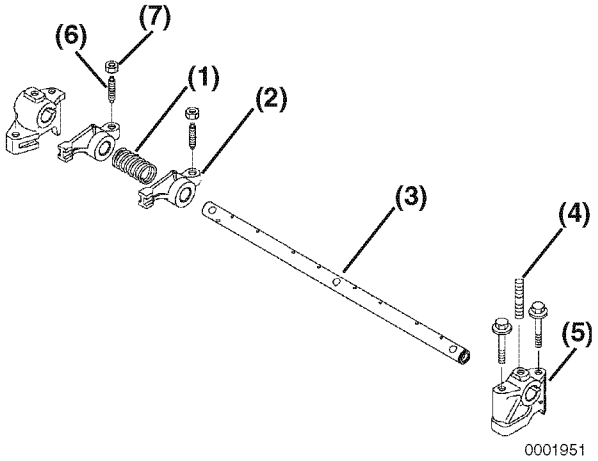

Figure 6-9

3. Remove the valve adjusting screw **(Figure 6-9, (6))** and the lock nut **(Figure 6-9, (7))** from the rocker arms.

Removal of Cylinder Head

1. Loosen the cylinder head bolts following the sequence shown in **(Figure 6-10)**.

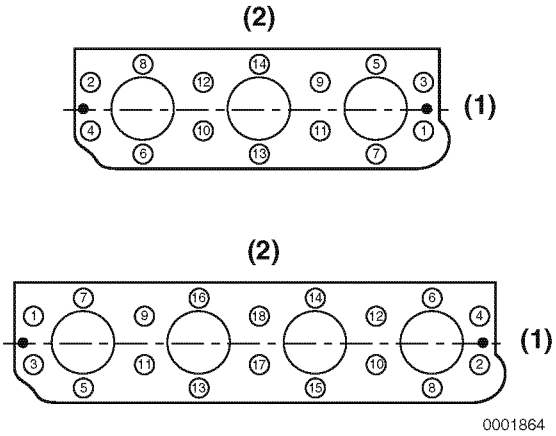

1 – Cooling Fan End
2 – Camshaft Side

Figure 6-10

2. Remove the cylinder head bolts **(Figure 6-11, (1))**.
3. Lift the cylinder head away from the cylinder block. Discard the cylinder head gasket **(Figure 6-11, (2))**. Position the cylinder head on the work bench to prevent damage to the combustion surface.

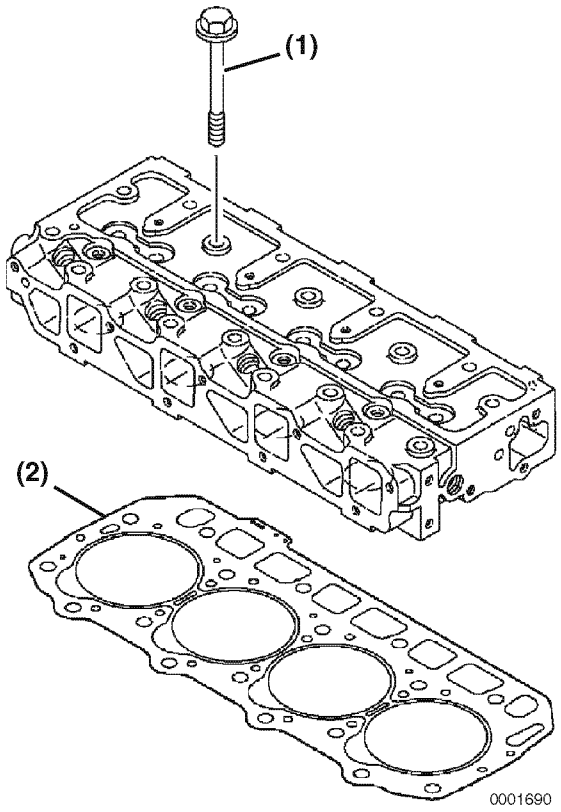

Figure 6-11

Removal of Intake / Exhaust Valves

1. Place the cylinder head on the work bench with the combustion side down.
2. Remove the valve cap **(Figure 6-13, (1))** and keep with the valve it was installed on.
3. Using the valve spring compressor tool, compress one of the valve springs **(Figure 6-12)**.

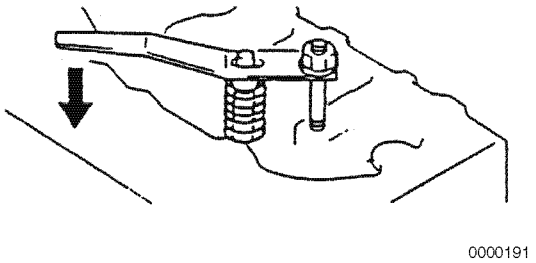

Figure 6-12

4. Remove the valve keepers **(Figure 6-13, (2))**.
5. Slowly release the tension on the valve spring.
6. Remove the spring retainer **(Figure 6-13, (3))** and valve spring **(Figure 6-13, (4))**.

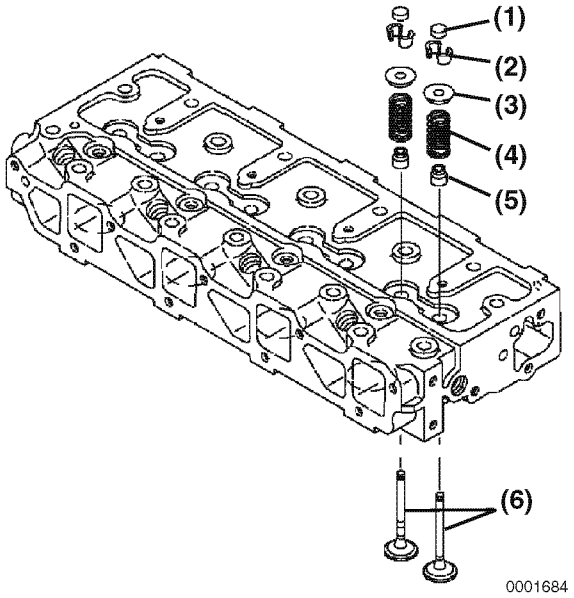

Figure 6-13

7. Repeat the procedure with all remaining valves.

Note: If the valves are to be reused, identify them so they can be installed in their original location.

8. Turn the cylinder head so the exhaust port side faces down. Remove the intake and exhaust valves **(Figure 6-13, (6))** from the cylinder head.
9. Remove the valve stem seals **(Figure 6-13, (5))**.

Removal of Valve Guides

Note: Removal of the valve guides should be postponed until inspection and measurement procedures have been performed. *See Inspection of Valve Guides on page 6-41.*

1. If the valve guides were not within specifications, use a drift pin and hammer to drive the valve guides **(Figure 6-14, (1))** out of the cylinder head.

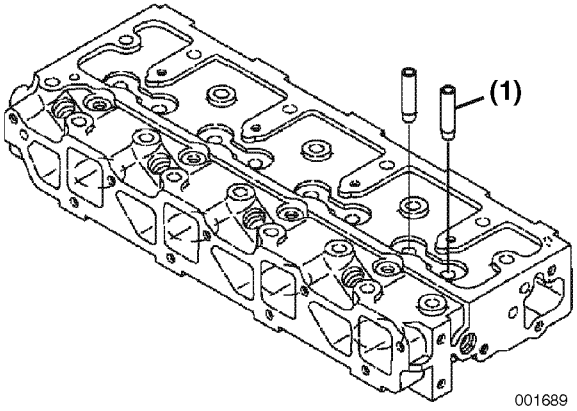

Figure 6-14

Cleaning of Cylinder Head Components

WARNING

FUME / BURN HAZARD!

- **Always read and follow safety related precautions found on containers of hazardous substances like parts cleaners, primers, sealants and sealant removers.**
- **Failure to comply could result in death or serious injury.**

0000014en

Thoroughly clean all components using a non-metallic brush and an appropriate solvent. Each part must be free of carbon, metal filings and other debris.

Inspection of Cylinder Head Components

Visually inspect the parts. Replace any parts that are obviously discolored, heavily pitted or otherwise damaged. Discard any parts that do not meet its specified limit.

CAUTION

Any part which is found defective as a result of inspection or any part whose measured value does not satisfy the standard or limit must be replaced.

0000119en

CAUTION

Any part determined to not meet the service standard or limit before the next service, as determined from the state of current rate of wear, should be replaced even though the part currently meets the service standard limit.

0000120en

Inspection of Push Rods

Push Rod Bend

Determine if the bend of the push rods are within the specified limit.

1. Place the push rods on a flat inspection block or layout bed.
2. Roll the push rods until a gap can be observed between a portion of the push rod and the surface of the block or layout bed.
3. Use a feeler gauge to measure the gap **(Figure 6-15)**. *See Push Rod on page 6-9 for the service limit.*

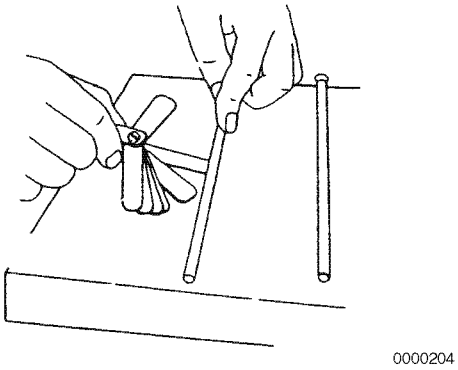

Figure 6-15

Inspection of Rocker Arm Assembly

Rocker Arm Shaft Hole Diameter

Use a test indicator and micrometer to determine if the inside diameter of all the rocker arm support brackets and the rocker arms **(Figure 6-16)** are within the specified limits. *See Rocker Arm and Shaft on page 6-9 for the service limit.*

Inspect the contact areas **(Figure 6-16, (1))** for excessive wear or damage.

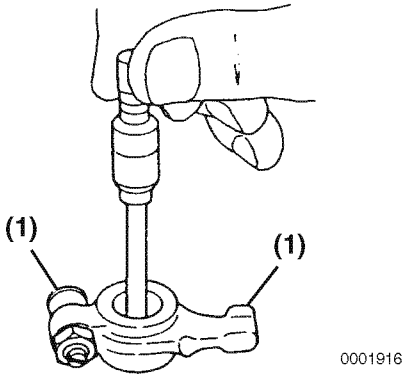

Figure 6-16

Rocker Arm Shaft Outside Diameter

Use a micrometer to measure the rocker arm shaft diameter. Measure at each rocker arm location in two directions 90° apart **(Figure 6-17)**. *See Rocker Arm and Shaft on page 6-9 for the service limit.*

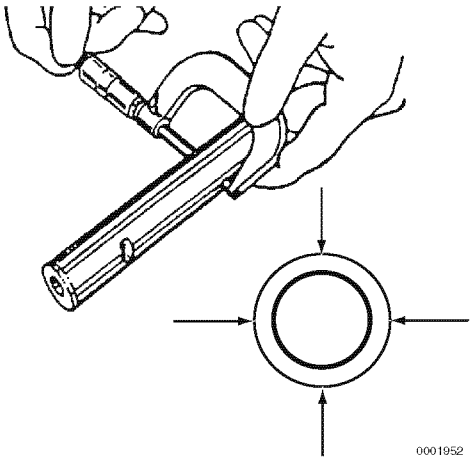

Figure 6-17

Inspection of Valve Guides

Visually inspect the valve guides for distortions, scoring or other damage.

Note: Measure the valve guides while they are installed in the cylinder head.

Use a telescoping gauge and micrometer to measure the inside diameter at each end of the valve guide. Measure in three places and 90° apart **(Figure 6-18)**. *See Intake / Exhaust Valve and Guide on page 6-7 for the service limit.* Replace valve guides if not within specification.

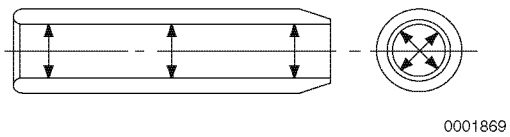

Figure 6-18

Inspection of Cylinder Head

Cylinder Head Distortion

Place the cylinder head flat and inverted (combustion side up) on the bench. Use a straight edge and a feeler gauge to measure cylinder head distortion **(Figure 6-19)**. Measure diagonally and along each side. *See Cylinder Head on page 6-6 for the service limit.*

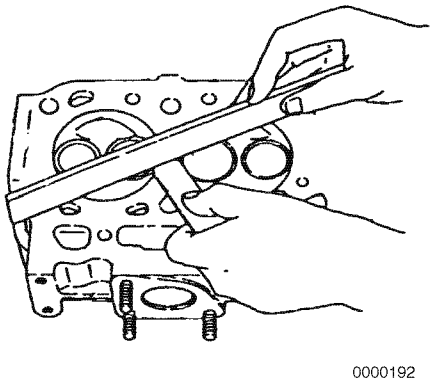

Figure 6-19

If distortion exceeds the service limit, resurface or replace the cylinder head. Remove only enough material to make the cylinder head flat, but do not remove more than 0.008 in. (0.20 mm).

Inspection of Intake and Exhaust Valves

Visually inspect the intake and exhaust valves. Replace any valves that are obviously discolored, heavily pitted or otherwise damaged.

Valve Stem Diameter

Use a micrometer to measure the valve stem diameter. Measure the valve stem near the combustion end and near the opposite end **(Figure 6-20, (1))**. *See Intake / Exhaust Valve and Guide on page 6-7 for the service limit.*

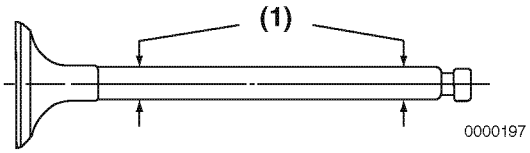

Figure 6-20

Valve Stem Bend

Place the valve stem on a flat inspection block or layout bed. Roll the valve until a gap can be observed between a portion of the valve stem and the surface of the block or bed. Use a feeler gauge to measure the gap **(Figure 6-21)**. *See Intake / Exhaust Valve and Guide on page 6-7 for the service limit.*

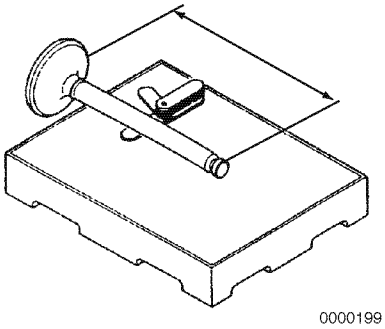

Figure 6-21

Valve Recession

Note: The valve guides must be installed to perform this check.

Insert the valves into their original locations and press them down until they are fully seated. Use a depth micrometer **(Figure 6-22)** to measure the difference between the cylinder head gasket surface and the combustion surface of each exhaust and intake valve **(Figure 6-23)**. *See Cylinder Head on page 6-6 for the service limit.*

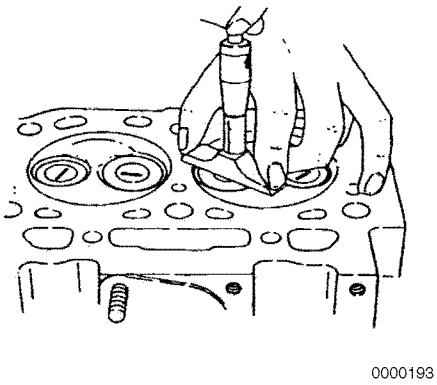

Figure 6-22

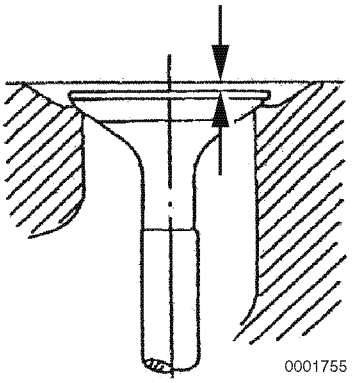

Figure 6-23

Valve Face and Valve Seat

Always check the clearance between the valve and valve guide before grinding or lapping the valve seats. *See Intake / Exhaust Valve and Guide on page 6-7 for the service limit.* If the clearance exceeds the limit, replace the valve and / or valve guide to bring the clearance within the limit.

Roughness or burrs will cause poor seating of a valve. Visually inspect the seating surfaces of each valve and valve seat to determine if lapping or grinding is needed.

Visually inspect all valve faces and valve seats for pitting, distortion, cracking, or evidence of overheating. Usually the valves and the valve seats can be lapped or ground to return them to serviceable condition. Severely worn or damaged components will require replacement.

Coat the valve seat with a thin coat of bluing compound. Install the valve and rotate it to distribute bluing onto the valve face. The contact pattern should be approximately centered on the valve face **(Figure 6-24, (1))** and even in width.

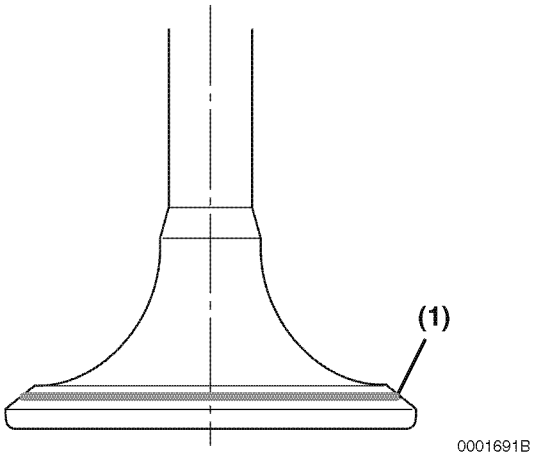

Figure 6-24

Also visually inspect the valve seat for even contact.

Light cutting can be performed by the use of a hand-operated cutter **(Figure 6-25, (3)).**

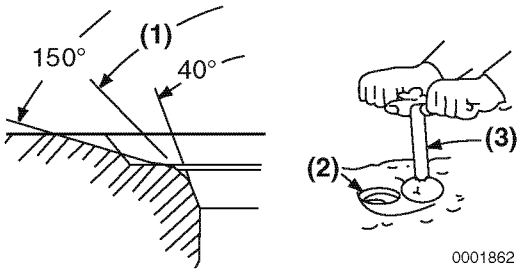

Figure 6-25

The valve seat diameter can be adjusted by top-grinding with a 150° stone to make the seat diameter smaller, and bottom-grinding using a 40° stone to make the seat diameter larger. Once the seat location has been corrected, grind and lap the seat angle **(Figure 6-25, (1))** to specification. *See Cylinder Head on page 6-6 for specifications.*

Grind the valve face and / or valve seat only enough to return them to serviceable condition. Grinding is needed if the valve and the valve seat do not contact correctly. Check the recession after grinding.

If the valve or seat require grinding, lap the valve after grinding. Lap the valve face to the valve seat using a mixture of valve lapping compound and engine oil.

Be sure to thoroughly wash all parts to remove all grinding powder or compound.

Inspection of Valve Springs

Inspect the valve springs. If damage or corrosion is seen, or if measurements exceed the specified limits, replace the springs.

Fractures

Check for fractures on the inside and outside portions of the springs. If the valve spring is fractured, replace the valve spring.

Corrosion

Check for corrosion of the spring material caused by oxidation.

Squareness

Use a flat surface and a square to check each spring for squareness **(Figure 6-26)**. *See Valve Spring on page 6-10 for the service limit.*

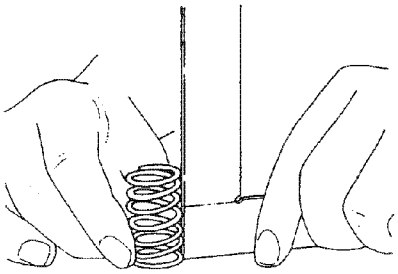

0000201

Figure 6-26

Free Length

Use a caliper to measure the length of the spring **(Figure 6-27)**. *See Valve Spring on page 6-10 for the service limit.*

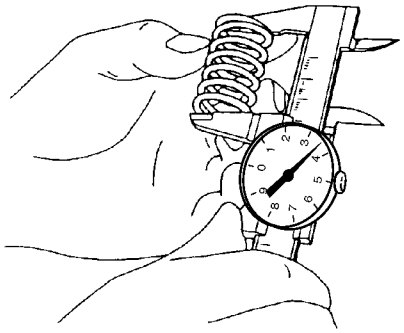

0000200

Figure 6-27

Reassembly of Cylinder Head

Use new gaskets, O-rings and seals for the reassembly of the cylinder head.

IMPORTANT

Liberally oil all components during reassembly to prevent premature wear or damage.

Reassembly of Valve Guides

1. The valve guides are installed into the cylinder head with an extremely tight press fit. Before installing the valve guides, place the valve guides in a freezer for at least twenty minutes This will cause the valve guides to contract, making it easier to install the valve guides into place.

2. Immediately after removing the valve guides from the freezer, insert the valve guides **(Figure 6-28, (1))** in their proper positions.

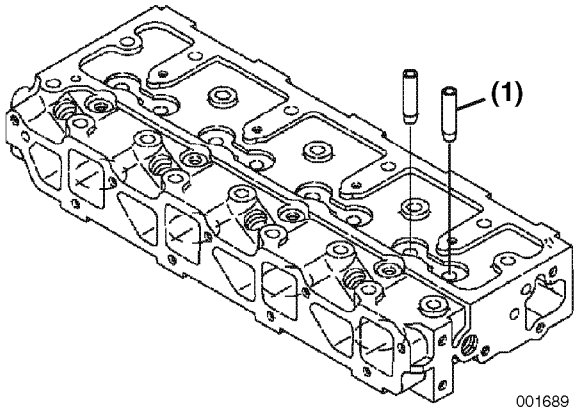

Figure 6-28

3. Finish installing the valve guides **(Figure 6-29, (1))** into the cylinder head to the proper height **(Figure 6-29, (3))** using the valve guide installation tool **(Figure 6-29, (2))**. *See Valve Guide Projection specification starting on page 6-7.*

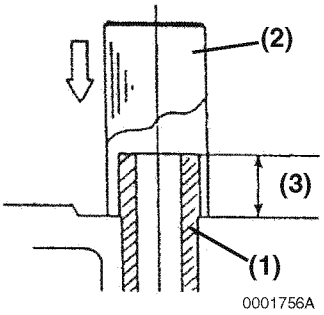

Figure 6-29

Reassembly of Intake and Exhaust Valves

IMPORTANT

Always install new valve stem seals.

The exhaust valve stem seals are different than the intake valve stem seals and can be identified by either the paint marks on the outside of the seals or by the color of the seal spring ***(Figure 6-30,*** **(4))**. *Ensure they are installed in the correct locations.*

Engine Model	Marking	
	Intake	Exhaust
3TNV84, 3TNV88, 3TNV84T, 4TNV84, 4TNV88	None	Yellow (Paint on outside of seal)
3TNV82A	None	Black (Seal Spring)

1. Oil the lip of the valve stem seal **(Figure 6-30, (2)).** Using the valve stem seal installation tool **(Figure 6-30, (1))**, install a new valve stem seal on each of the valve guides **(Figure 6-30, (3))**.

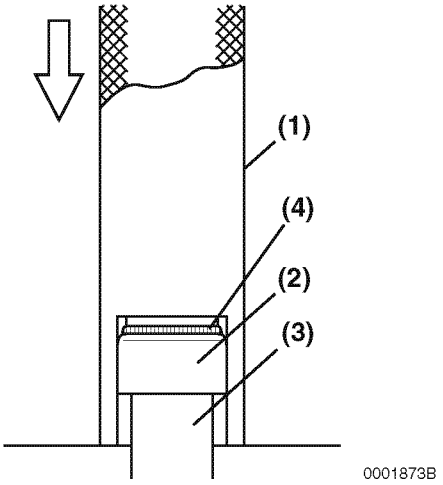

Figure 6-30

2. Measure the distance **(Figure 6-31, (1))** from the cylinder head to valve stem seal to ensure proper clearance **(Figure 6-31, (2))** between the guide and the seal. *See Valve Stem Seal Projection specification on page 6-9.*

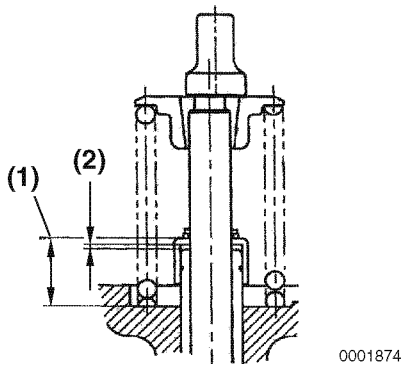

Figure 6-31

3. Place the cylinder head assembly on its exhaust port side.
4. Place all the valves **(Figure 6-32, (6))** in their proper location in the cylinder head.

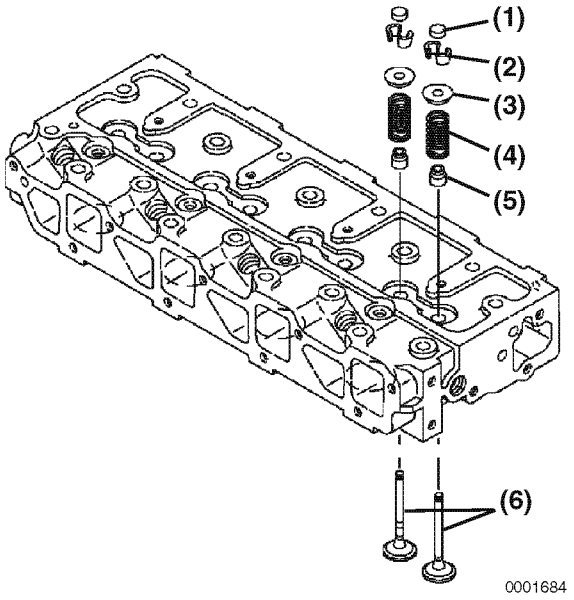

Figure 6-32

5. Place the cylinder head on the workbench with the combustion side down to install the valve springs. Install the valve spring **(Figure 6-32, (4))** and the spring retainer **(Figure 6-32, (5))**.
6. Using the valve spring compressor tool, compress the valve spring.
7. Insert the valve keepers **(Figure 6-32, (2))** and slowly release the tension on the valve spring. Install the valve cap **(Figure 6-32, (1)).** Repeat the steps on all the remaining valves.

Reassembly of Cylinder Head

1. Carefully clean both the combustion surface of the cylinder head and the top surface of the cylinder block. Then place a new cylinder head gasket **(Figure 6-33, (2))** on the cylinder block.
2. Position the cylinder head on the cylinder head gasket.

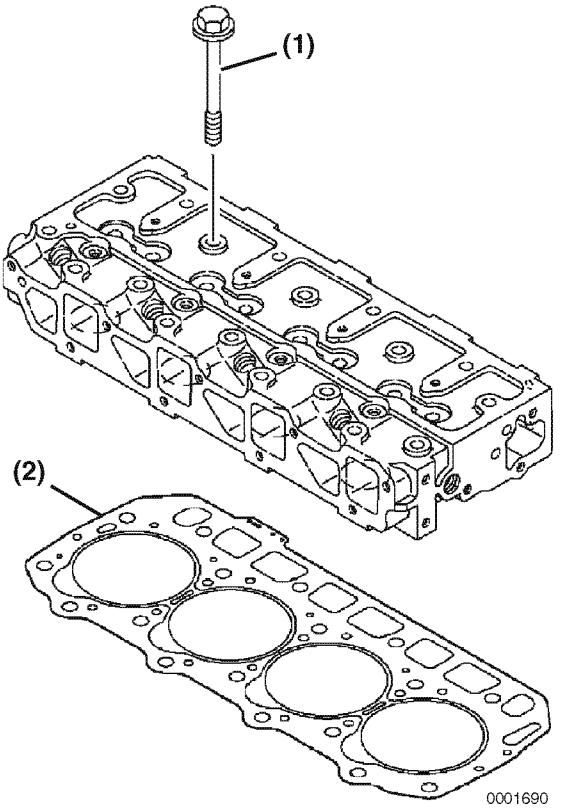

Figure 6-33

3. Lightly oil the threads of the cylinder head bolts **(Figure 6-33, (1))**. Tighten the bolts to the specified torque in two steps as shown in the chart below. Tighten in the sequence shown in **(Figure 6-34)**. *See Special Torque Chart on page 6-25 for specification.*

First Step	1/2 of final torque
Second Step	Final torque

4. Insert the push rods in their respective positions.

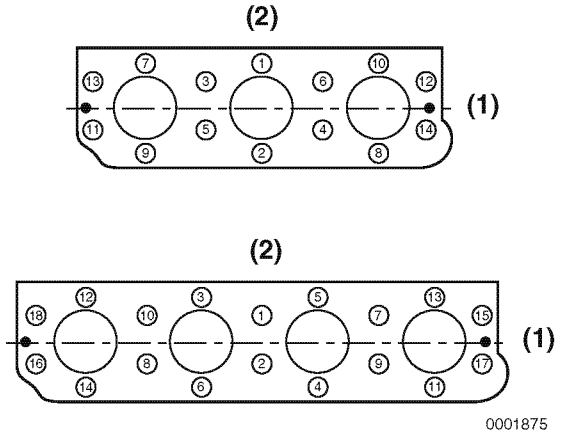

1 – Fan End
2 – Camshaft Side

Figure 6-34

Reassembly of Rocker Arm Reassembly

Note: Ensure the lubrication holes **(Figure 6-35, (1))** in the rocker arm shaft are oriented correctly with respect to the rocker arms **(Figure 6-35, (2))**.

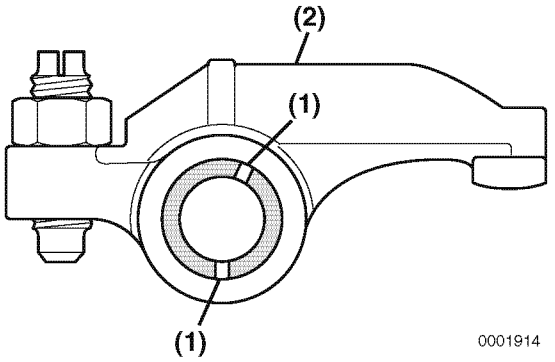

Figure 6-35

1. Lubricate the rocker arm shaft. Slide the rocker arm supports **(Figure 6-36, (5))**, springs **(Figure 6-36, (1))** and rocker arms **(Figure 6-36, (2))** onto the shaft.

Note: The rocker arm shaft fits tightly in the rocker arm supports. Clamp the support in a padded vise. Twist and push on the rocker arm shaft to reinstall.

Note: To properly align the rocker arm shaft with the rocker arm shaft supports, first reinstall a rocker arm support **(Figure 6-36, (5))** having a hole for the shaft alignment stud **(Figure 6-36, (4))**. Align the hole in the rocker arm shaft and the hole in the rocker arm support. Reinstall the alignment stud.

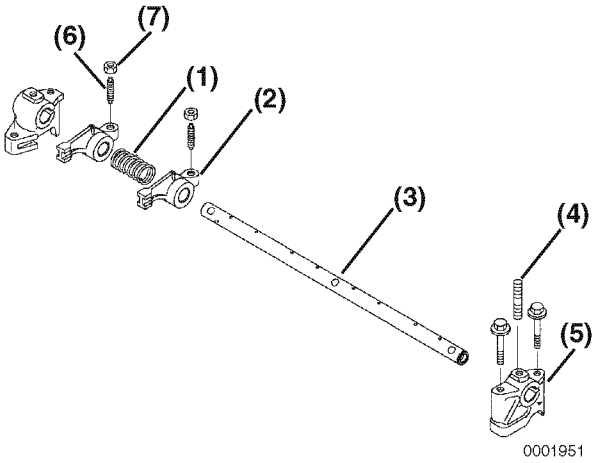

Figure 6-36

Note: **Figure 6-36** shows components for one cylinder. Components for all remaining cylinders are assembled in the same order.

2. Place the rocker arm shaft assembly onto the cylinder head.
3. If removed, reinstall the valve adjusting screws **(Figure 6-36, (6))** and the lock the nuts **(Figure 6-36, (7))**.
4. Align the push rods with their respective rocker arms.
5. Reinstall and tighten the rocker arm shaft retaining bolts to the specified torque.

6. Tighten the rocker arm shaft alignment studs.
7. Adjust the valve clearance. *See Measuring and Adjusting Valve Clearance on page 6-66.*

Reassembly of the Valve Cover

1. Lightly grease a new valve cover gasket **(Figure 6-37, (4))**. Place the gasket in the groove of the valve cover **(Figure 6-37, (3))**.
2. Place the valve cover on the cylinder head.
3. Be sure new O-rings **(Figure 6-37, (2))** are installed on the valve cover nuts. Reinstall and tighten the valve cover nuts **(Figure 6-37, (1))**.
4. Reinstall the exhaust manifold using a new gasket. Tighten the bolts to the specified torque.

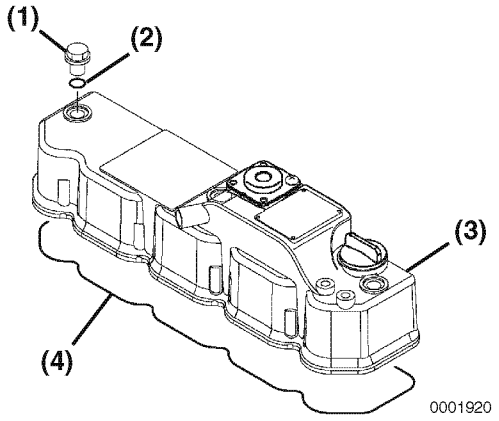

Figure 6-37

5. Reinstall the intake manifold using a new gasket. Tighten the bolts to the specified torque.
6. Install each glow plug **(Figure 6-38, (1))**, and tighten it with the specified torque. Install each electrical harness **(Figure 6-38, (1))**, and tighten it with the specified torque.

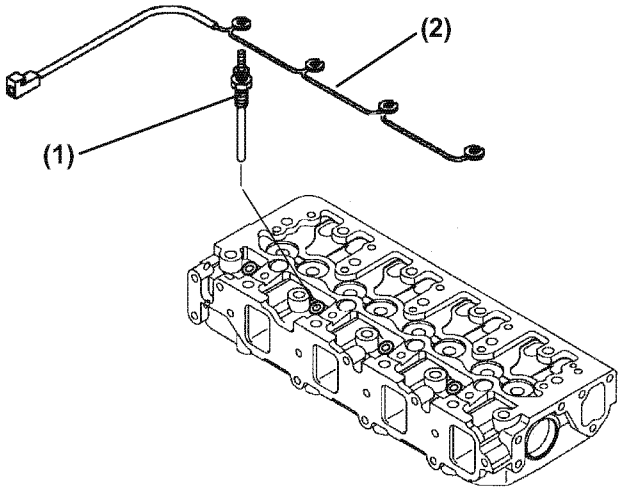

Figure 6-38

7. Reinstall the fuel injectors. *See Installation of the Fuel Injectors on page 7-42.*
8. Reinstall the high pressure and the return fuel injection lines. *See Installation of the Fuel Injectors on page 7-42*
9. Reinstall the engine coolant pump. *See Reassembly of Engine Coolant Pump on page 8-11.*
10. Reinstall the coolant hoses on the cold start device on the fuel injection pump.
11. Reinstall the alternator. *See Installation of Alternator on page 12-16.*

4-VALVE CYLINDER HEAD

4-Valve Cylinder Head Components

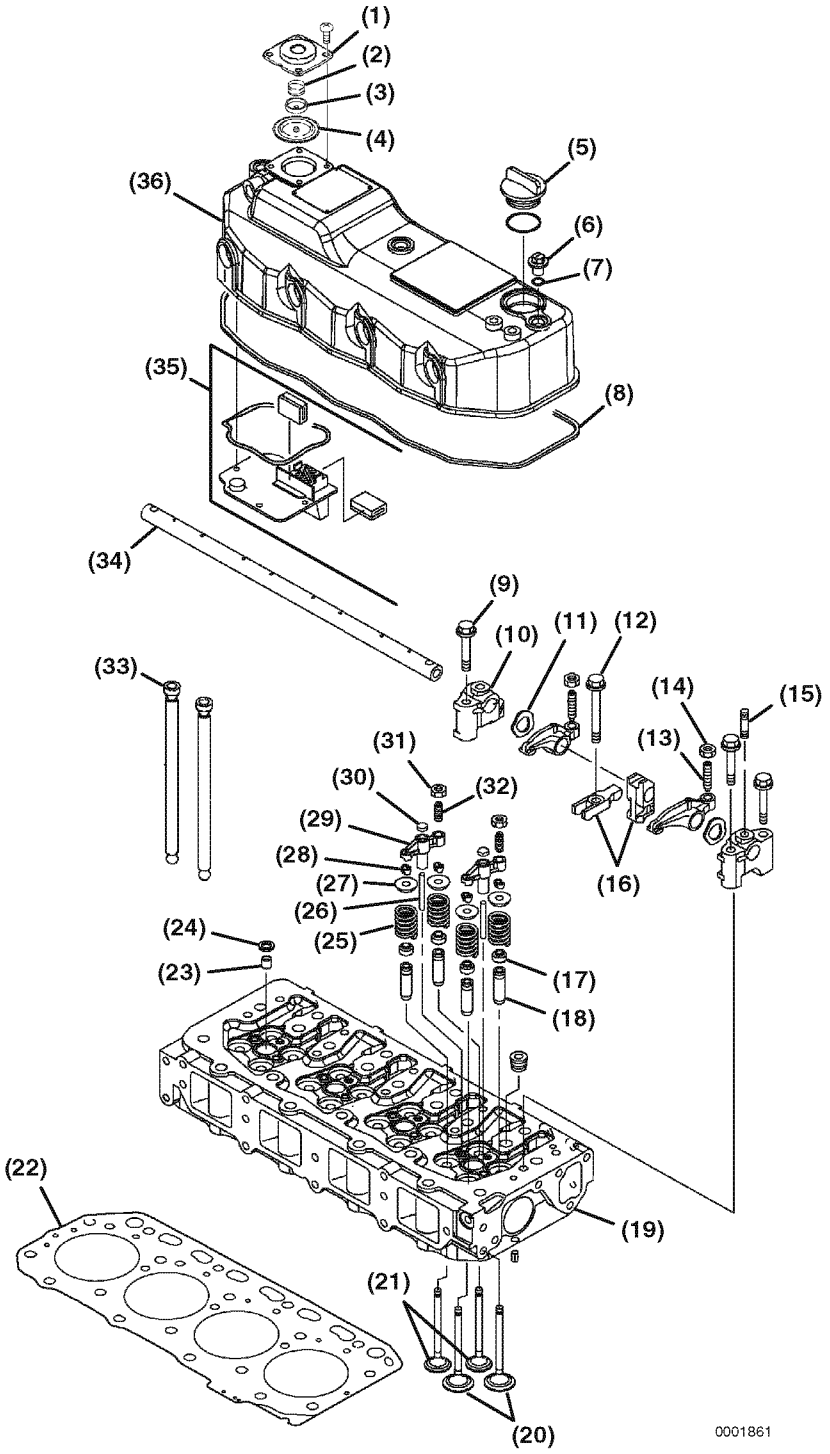

Figure 6-39

1 – Crankcase Breather Cover
2 – Diaphragm Spring
3 – Diaphragm Cup
4 – Crankcase Breather Diaphragm
5 – Oil Fill Cap
6 – Valve Cover Nut
7 – Valve Cover Nut O-Ring
8 – Valve Cover Gasket
9 – Support Bolt
10 – Rocker Arm Shaft Support
11 – Wave Washer
12 – Fuel Injector Retainer Bolt
13 – Valve Adjusting Screw (Primary)
14 – Valve Adjusting Screw Lock Nut (Primary)
15 – Rocker Arm Shaft Aligning Stud
16 – Fuel Injector Retainer
17 – Valve Stem Seal
18 – Valve Guide
19 – Cylinder Head
20 – Intake Valve
21 – Exhaust Valve
22 – Cylinder Head Gasket
23 – Fuel Injector Nozzle Protector
24 – Fuel Injector Nozzle Seat
25 – Valve Spring
26 – Valve Bridge Guide
27 – Spring Retainer
28 – Valve Keepers
29 – Valve Bridge
30 – Valve Bridge Seat
31 – Valve Adjusting Screw Lock Nut (Secondary)
32 – Valve Adjusting Screw (Secondary)
33 – Push Rod
34 – Rocker Arm Shaft
35 – Crankcase Breather Components
36 – Valve Cover

Disassembly of 4-Valve Cylinder Head

Prepare a clean, flat working surface on a workbench large enough to accommodate the cylinder head assembly. Discard all gaskets, O-rings and seals. Use new gaskets, O-rings and seals on reassembly of the cylinder head.

1. Drain the coolant from the engine into a suitable container. *See Drain, Flush and Refill Cooling System With New Coolant on page 5-36.*

CAUTION

Identify all parts and their location using an appropriate method. It is important that all parts are returned to the same position during the reassembly process.

0000080en

2. Remove the high pressure fuel injection lines **(Figure 6-40, (1))**. *See Removal of Fuel Injectors on page 7-35.*

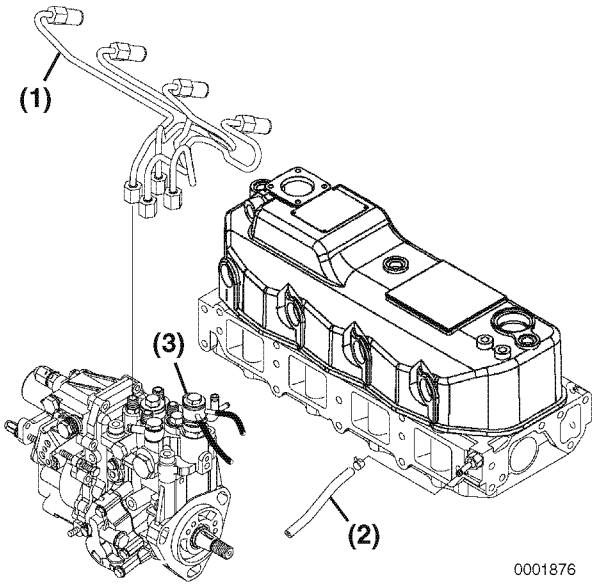

Figure 6-40

CAUTION

Remove or install the high-pressure fuel injection lines as an assembly whenever possible. Disassembling the high-pressure fuel injection lines from the retainers or bending any of the fuel lines will make it difficult to reinstall the fuel lines.

0000047en

3. Disconnect the fuel return hose **(Figure 6-40, (2))** from the cylinder head.
4. Disconnect the hoses **(Figure 6-40, (3))** from the cold start device on the fuel injection pump. This cooling water pipe is not used in electronically controlled engines 4TNV84T-Z, 4TNV98-Z, 4TNV98-E and 4TNV98T-Z. Instead, these engines use a solenoid valve and connecting coupler but, when removing the cylinder head only, it is not necessary to remove the connecting coupler.
5. Remove the turbocharger-to-intake manifold hose **(Figure 6-41, (1))** (if equipped).
6. Disconnect the electrical wire from the intake air heater **(Figure 6-41, (12))**.
7. Remove the intake manifold bolts **(Figure 6-41, (11))**. Remove the intake manifold **(Figure 6-41, (10))**. Discard the intake manifold gasket **(Figure 6-41, (9))**.
8. Disconnect the turbocharger oil supply **(Figure 6-41, (2))** and the return lines **(Figure 6-41, (4))** (if equipped).
9. Remove the exhaust manifold bolts **(Figure 6-41, (7))**. Remove the exhaust manifold **(Figure 6-41, (6))** with the turbocharger attached. Discard the exhaust manifold gasket. **(Figure 6-41, (5))**.

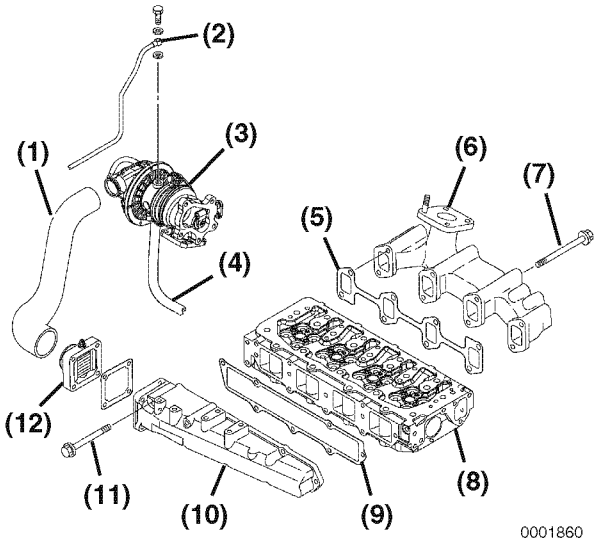

Figure 6-41

10. Remove the engine coolant pump. *See Disassembly of Engine Coolant Pump on page 8-10.*

Removal of Valve Cover

Note: The high pressure fuel injection lines and valve cover grommets must be removed prior to removing the valve cover. *See Removal of Fuel Injectors on page 7-35.*

1. Remove the high-pressure fuel lines.
2. Use a flat-blade screwdriver **(Figure 6-42)** to remove the fuel injection line grommets **(Figure 6-43, (1))** from the valve cover **(Figure 6-43, (3))** and fuel injectors **(Figure 6-43, (2))**. There is a notch at the 3 o'clock position in the valve cover opening to insert the screwdriver.

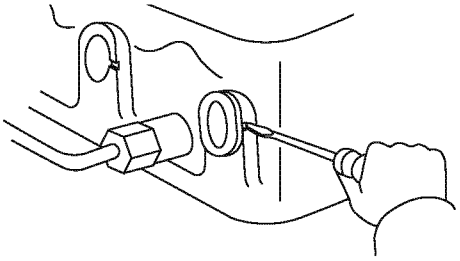

Figure 6-42

3. Remove the valve cover nuts **(Figure 6-43, (4))**.
4. Remove the O-ring **(Figure 6-43, (5))** on each valve cover nut.

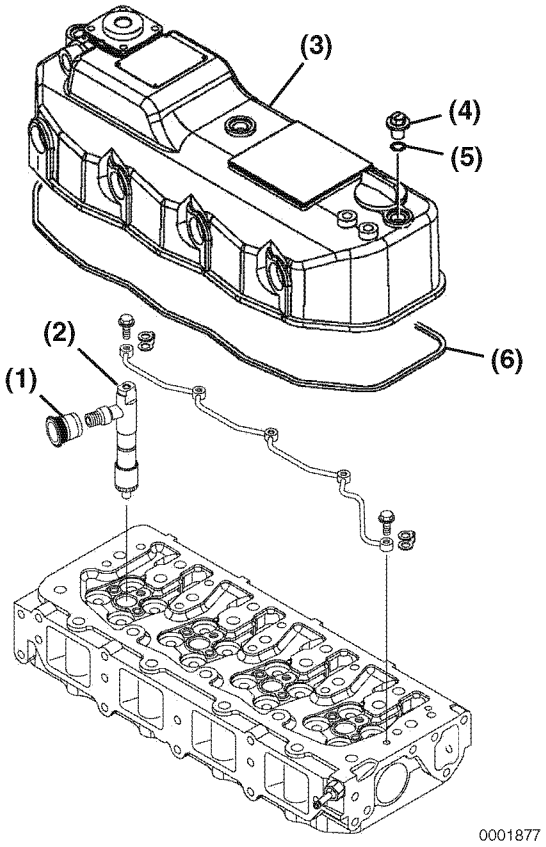

Figure 6-43

5. Remove the valve cover **(Figure 6-43, (3))**. Discard the valve cover gasket **(Figure 6-43, (6))**.
6. Inspect and clean the crankcase breather assembly. *See Inspect Crankcase Breather System on page 5-40.*

Removal of Rocker Arm Assembly

1. Remove the fuel injectors from the cylinder head. *See Removal of Fuel Injectors on page 7-35.*
2. Remove the bolts **(Figure 6-44, (1))** that retain the rocker arm shaft supports to the cylinder head.
3. Remove the rocker arm and shaft assembly from the cylinder head.

Note: Identify the push rods and valve bridges so they can be installed in their original locations.

4. Remove the push rods **(Figure 6-44, (2))**.
5. Remove the valve bridge assemblies **(Figure 6-44, (3))**. Remove the seat **(Figure 6-44, (4))** from each valve bridge.
6. Identify all parts so that they will be reinstalled in their original locations.

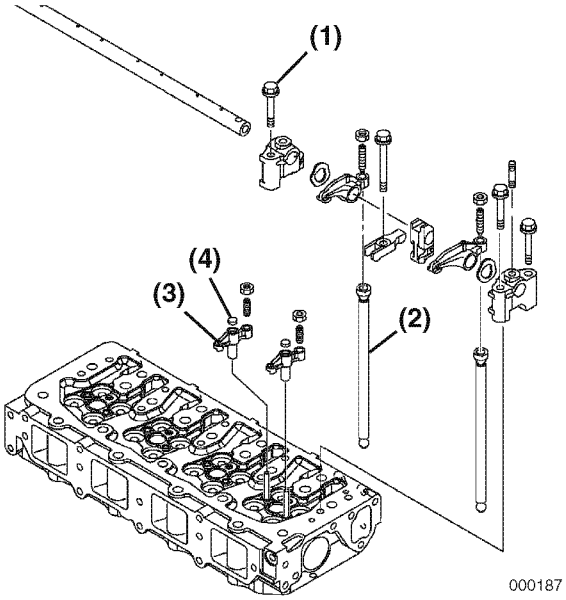

Figure 6-44

Disassembly of Rocker Arm Assembly

Note: Identify the rocker arms so they can be reinstalled with the original matching valve and pushrod.

1. Remove the rocker arm shaft alignment studs **(Figure 6-45, (5))** from the rocker arm shaft supports **(Figure 6-45, (6))**.
2. Slide the supports, wave washers **(Figure 6-45, (7))**, rocker arms **(Figure 6-45, (8))**, and fuel injector retainers **(Figure 6-45, (4))** off the rocker shaft **(Figure 6-45, (1))**, leaving these parts in order on the bench surface.

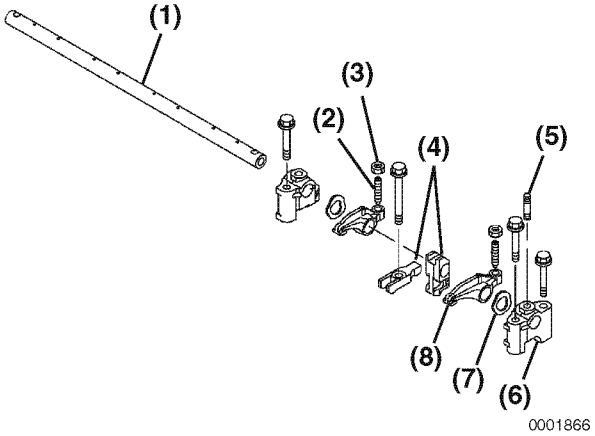

Figure 6-45

Note: **Figure 6-45** shows components for one cylinder. Components for all remaining cylinders are assembled in the same order.

3. Remove the valve adjusting screw **(Figure 6-45, (2))** and the lock nut **(Figure 6-45, (3))** from the rocker arms.

Removal of Cylinder Head

1. Loosen the cylinder head bolts following the sequence shown in **(Figure 6-46)**.

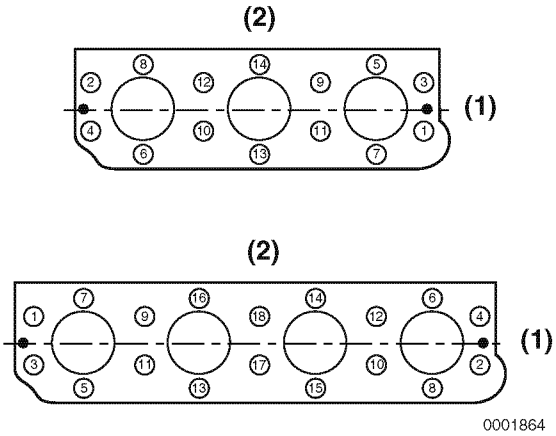

1 – Cooling Fan End
2 – Camshaft Side

Figure 6-46

2. Remove the cylinder head bolts **(Figure 6-47, (1))**.
3. Lift the cylinder head away from the cylinder block. Discard the cylinder head gasket **(Figure 6-47, (2))**. Place the cylinder head on the work bench to prevent damage to the combustion surface.

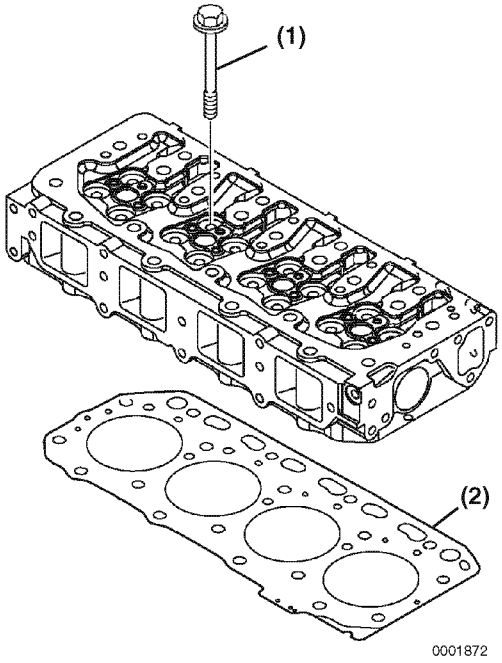

Figure 6-47

Removal of Intake and Exhaust Valves

1. Place the cylinder head on the work bench with the combustion side down.
2. Using the valve spring compressor tool, compress one of the valve springs **(Figure 6-48)**.

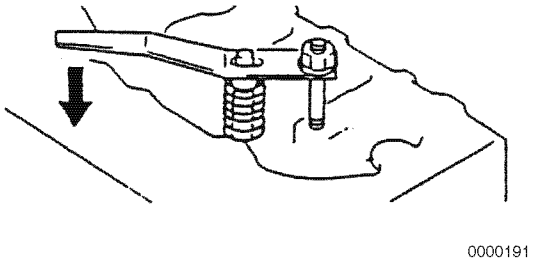

Figure 6-48

3. Remove the valve keepers **(Figure 6-49, (1))**.
4. Slowly release the tension on the valve spring.
5. Remove the spring retainer **(Figure 6-49, (2))**, valve spring **(Figure 6-49, (3)).**

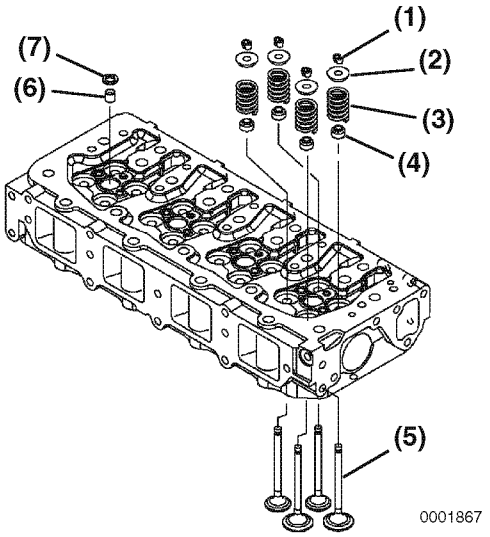

Figure 6-49

6. Repeat the procedure with all the remaining valves.

Note: If the valves are to be reused, identify them so they can be installed in their original location.

7. Remove the injector nozzle protectors **(Figure 6-49, (6))** and the seats **(Figure 6-49, (7)).**
8. Turn the cylinder head so the exhaust port side faces down. Remove the intake and exhaust valves **(Figure 6-49, (5))** from the cylinder head.
9. Remove the valve stem seals **(Figure 6-49, (4))**.

Removal of Valve Guides

Note: Removal of the valve guides should be postponed until inspection and measurement procedures have been performed. *See Inspection of Valve Guides on page 6-57.*

1. Using a drift pin and hammer, drive the valve guides **(Figure 6-50, (1))** out of the cylinder head.

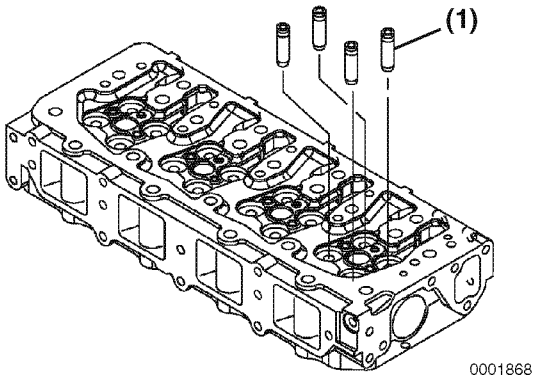

Figure 6-50

Cleaning of Cylinder Head Components

⚠ WARNING

FUME / BURN HAZARD!

- **Always read and follow safety related precautions found on containers of hazardous substances like parts cleaners, primers, sealants and sealant removers.**
- **Failure to comply could result in death or serious injury.**

0000014en

Thoroughly clean all components using a non-metallic brush and an appropriate solvent. Each part must be free of carbon, metal filings and other debris.

Inspection of Cylinder Head Components

Visually inspect the parts. Replace any parts that are obviously discolored, heavily pitted or otherwise damaged. Discard any parts that do not meet its specified limit.

CAUTION

Any part which is found defective as a result of inspection or any part whose measured value does not satisfy the standard or limit must be replaced.

0000119en

CAUTION

Any part determined to not meet the service standard or limit before the next service, as determined from the state of current rate of wear, should be replaced even though the part currently meets the service standard limit.

0000120en

Inspection of Push Rods

Push Rod Bend

1. Place the push rods on a flat inspection block or layout bed.
2. Roll the push rods until a gap can be observed between a portion of the push rod and the surface of the block or layout bed.
3. Use a feeler gauge to measure the gap **(Figure 6-51)**. *See Push Rod on page 6-9 for the service limit.*

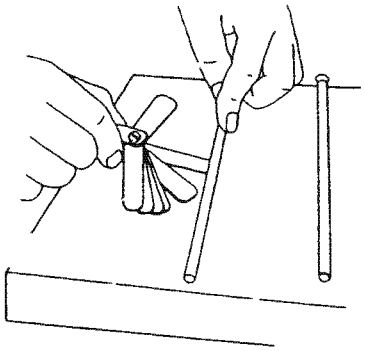

0000204

Figure 6-51

Inspection of Rocker Arm Assembly

Rocker Arm Shaft Hole Diameter

1. Use a telescoping gauge and micrometer to determine if the inside diameter of all the rocker arm support brackets and the rocker arms **(Figure 6-52)** are within the specified limits. *See Rocker Arm and Shaft on page 6-9 for the service limit.*
2. Inspect the contact areas **(Figure 6-52, (1))** for excessive wear or damage.

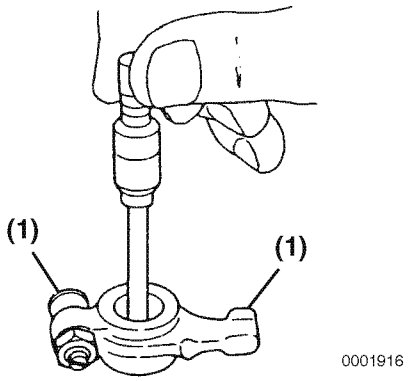

Figure 6-52

Rocker Arm Shaft Outside Diameter

Use a micrometer to measure the rocker arm shaft diameter **(Figure 6-53).** Measure at each rocker arm location in two directions 90° apart **(Figure 6-53)**. *See Rocker Arm and Shaft on page 6-9 for the service limit.*

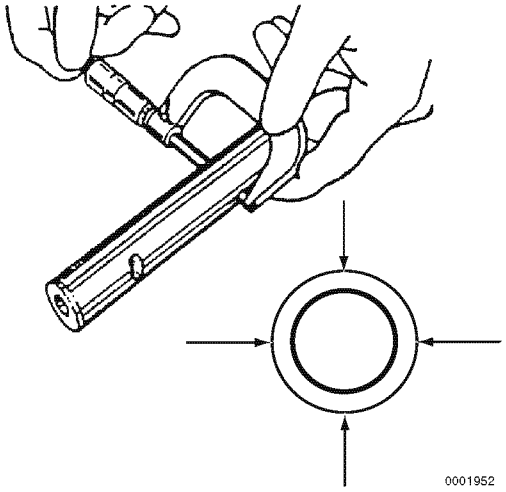

Figure 6-53

Inspection of Valve Guides

Valve Guide Inside Diameter

Visually inspect the valve guides for distortions, scoring or other damage.

Note: Measure the valve guides while they are installed in cylinder head.

Use a telescoping gauge and micrometer to measure the inside diameter at each end of the valve guide. Measure in three places and 90° apart **(Figure 6-54)**. *See Intake / Exhaust Valve and Guide on page 6-7 for the service limit.* Replace the valve guides if not within specification.

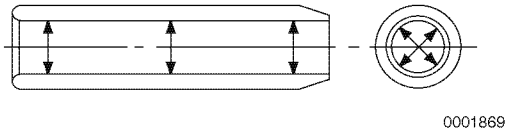

Figure 6-54

Inspection of Cylinder Head

Cylinder Head Distortion

Place the cylinder head flat and inverted (combustion side up) on the bench. Use a straight edge and feeler gauge to measure cylinder head distortion **(Figure 6-55)**. Measure diagonally and along each side. *See Cylinder Head on page 6-6 for the service limit.*

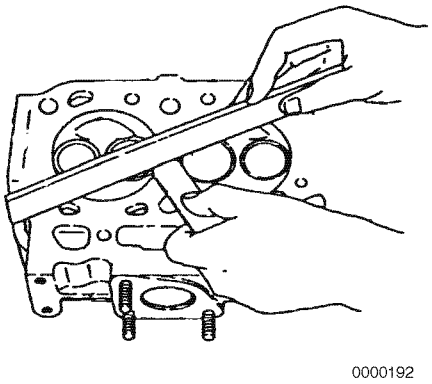

Figure 6-55

If distortion exceeds the service limit, resurface or replace the cylinder head. Remove only enough material to make the cylinder head flat, but do not remove more than 0.008 in (0.20 mm).

Inspection of Intake and Exhaust Valves

Visually inspect the intake and exhaust valves. Replace any valves that are obviously discolored, heavily pitted or otherwise damaged.

Valve Stem Diameter

Use a micrometer to measure the valve stem diameter. Measure the valve stem near the combustion end and near the opposite end **(Figure 6-56, (1))**. *See Intake / Exhaust Valve and Guide on page 6-7 for the service limit.*

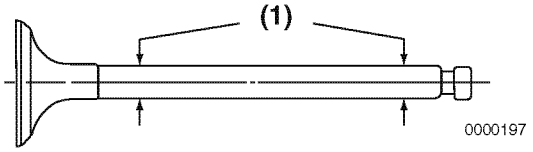

Figure 6-56

Valve Stem Bend

Place the valve stem on a flat inspection block or layout bed. Roll the valve until a gap can be observed between a portion of the valve stem and the surface of the block or bed. Use a feeler gauge to measure the gap **(Figure 6-57)**. *See Intake / Exhaust Valve and Guide on page 6-7 for the service limit.*

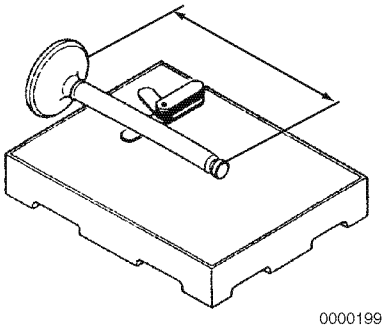

Figure 6-57

Valve Recession

Note: The valve guides must be installed to perform this check.

Insert the valves into their original locations and press them down until they are fully seated. Use a depth micrometer **(Figure 6-58)** to measure the difference between the cylinder head gasket surface and the combustion surface of each exhaust and intake valve **(Figure 6-59)**. *See Cylinder Head on page 6-6 for the service limit.*

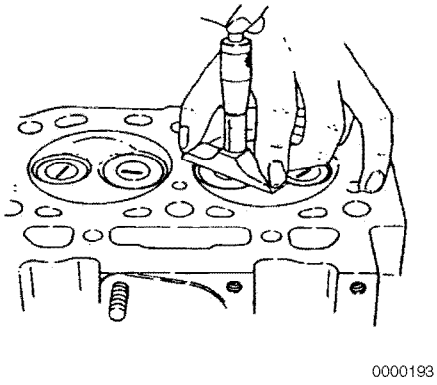

Figure 6-58

Note: 2-Valve cylinder head is shown. 4-Valve cylinder head is similar.

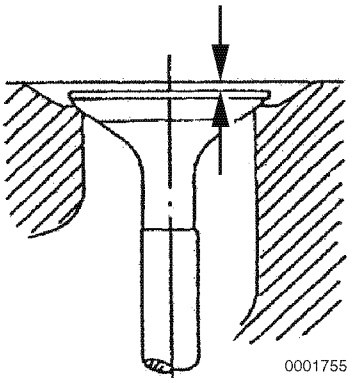

Figure 6-59

Valve Face and Valve Seat

Always check the clearance between the valve and valve guide before grinding or lapping the valve seats. *See Intake / Exhaust Valve and Guide on page 6-7 for the service limit.* If the clearance exceeds the limit, replace the valve and/or valve guide to bring the clearance within the limit.

Roughness or burrs will cause poor seating of a valve. Visually inspect the seating surfaces of each valve and valve seat to determine if lapping or grinding is needed.

Visually inspect all valves faces and valve seats for pitting, distortion, cracking, or evidence of overheating. Usually the valves and valve seats can be lapped or ground to return them to serviceable condition. Severely worn or damaged components will require replacement.

Coat the valve seat with a thin coat of bluing compound. Install the valve and rotate to distribute bluing onto the valve face. The contact pattern should be approximately centered on the valve face **(Figure 6-60, (1))** and even in width.

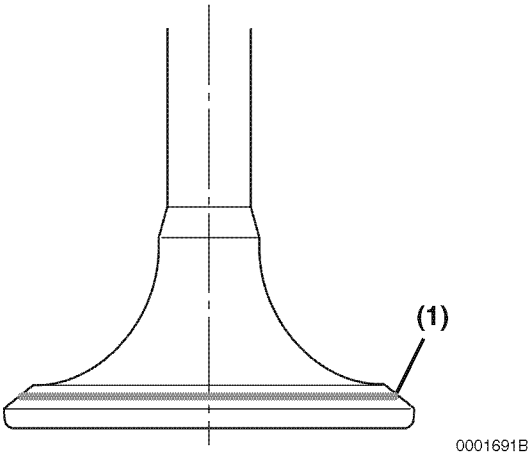

Figure 6-60

Also visually inspect the valve seat for even contact.

Light cutting can be performed by the use of a hand-operated cutter **(Figure 6-61)**.

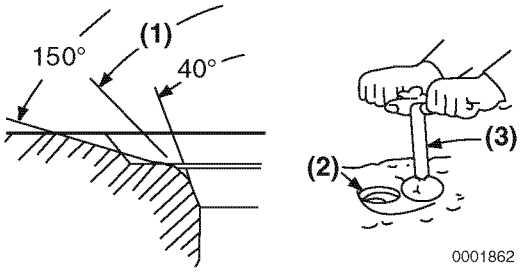

Figure 6-61

Valve seat diameter can be adjusted by top-grinding with a 150° stone to make the seat diameter smaller, and bottom-grinding using a 40° stone to make the seat diameter larger. Once the seat location has been corrected, grind and lap the seat angle **(Figure 6-61, (1))** to specification. *See Cylinder Head on page 6-6 for specifications.*

Grind the valve face and/or valve seat as necessary to return them to serviceable condition. Grinding is needed if the valve and valve seat do not contact correctly. Check the valve margin and valve recession after grinding.

If the valve or seat require grinding, lap the valve after grinding. Lap the valve face to the valve seat using a mixture of valve lapping compound and engine oil.

Be sure to thoroughly wash all parts to remove all grinding powder or compound.

Inspection of Valve Springs

Inspect the valve springs. If damage or corrosion is seen, or if measurements exceed the specified limits, replace the springs.

Fractures

Check for fractures on the inside and outside portions of the springs. If the valve spring is fractured, replace the valve spring.

Corrosion

Check for corrosion of spring material caused by oxidation.

Squareness

Use a flat surface and a square to check each spring for squareness **(Figure 6-62)**. *See Valve Spring on page 6-10 for the service limit.*

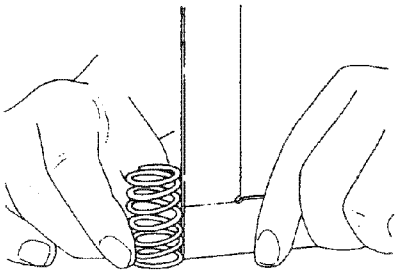

0000201

Figure 6-62

Free Length

Use a caliper to measure the length of the spring **(Figure 6-63)**. *See Valve Spring on page 6-10 for the service limit.*

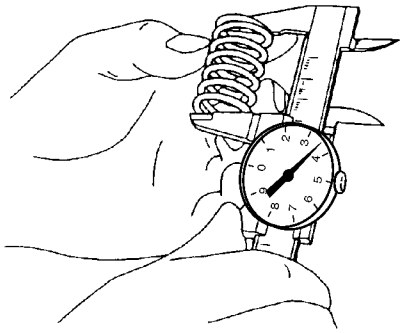

0000200

Figure 6-63

Inspection of Valve Bridges

Visually inspect the contact surface at both ends of the valve bridge **(Figure 6-64, (2))** for excessive wear or mushrooming.

Remove and inspect the seat **(Figure 6-64, (1))**.

Measure the diameter of the valve bridge guide pin bore in the valve bridge and guide pin **(Figure 6-64, (3))**. *See Rocker Arm and Shaft on page 6-9 for the service limit.*

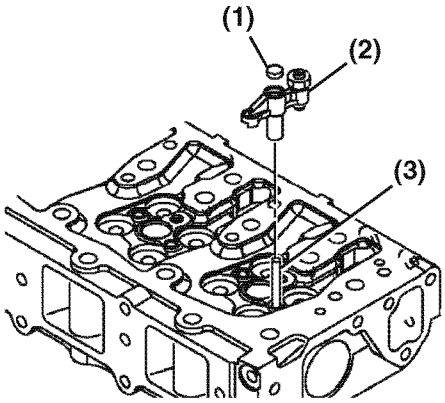

Figure 6-64

Reassembly of Cylinder Head

Use new gaskets, O-rings, and seals on reassembly of the cylinder head.

IMPORTANT

Liberally oil all components during reassembly to prevent premature wear or damage.

Reassembly of Valve Guides

1. The valve guides are installed into the cylinder head with an extremely tight press fit. Before installing the valve guides, place the valve guides in a freezer for at least twenty minutes This will cause the valve guides to contract, making it easier to install the valve guides into place.
2. Immediately after removing the valve guides from the freezer, insert the valve guides **(Figure 6-65, (1))** in their proper positions.

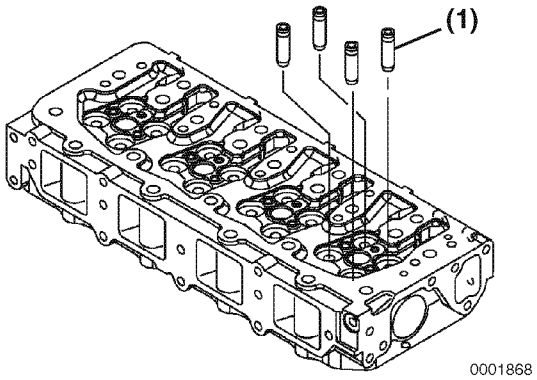

Figure 6-65

3. Finish installing the valve guides **(Figure 6-66, (1))** into the cylinder head to the proper height **(Figure 6-66, (3))** using the valve guide installation tool **(Figure 6-66, (2))**. *See Intake / Exhaust Valve and Guide on page 6-7.*

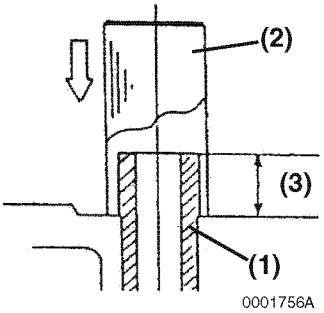

Figure 6-66

Reassembly of Intake and Exhaust Valves

IMPORTANT

When installing valve stem seals, use new ones instead of reusing removed seals.

*Exhaust valve and intake valve stem seals are different. They can be distinguished based on the paint marks on the outer side of the seal or the color of the seal spring **(Figure 6-67, (4))**. When installing each stem seal, take care to correctly position it.*

Engine Model	Marking	
	Intake	Exhaust
4TNV84	White (Seal Spring)	Black (Seal Spring)
4TNV94L,4TNV98, 4TNV98T,4TNV106, 4TNV106T	None	Black (Seal Spring)

1. Oil the lip of the valve stem seal **(Figure 6-67, (2))**. Using the valve stem seal installation tool **(Figure 6-67, (1))**, install a new valve stem seal on each of the valve guides **(Figure 6-67, (3))**.

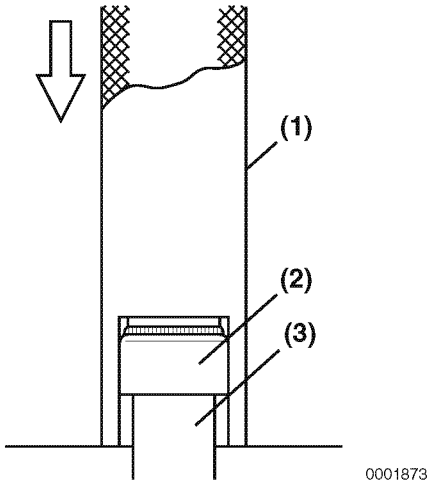

Figure 6-67

2. Measure the distance **(Figure 6-68, (1))** from the cylinder head to the valve stem seal to ensure proper clearance **(Figure 6-68, (2))** between the guide and seal. *See Intake / Exhaust Valve and Guide on page 6-7.*

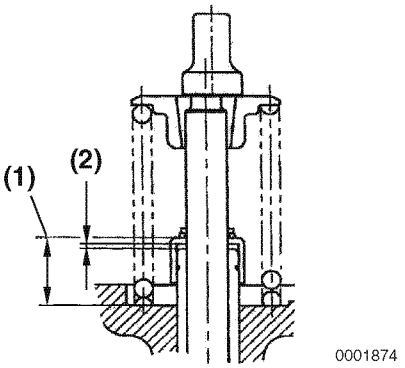

Figure 6-68

3. Place the cylinder head assembly on its exhaust port side.
4. Place all the valves **(Figure 6-69, (5))** in their proper location in the cylinder head.

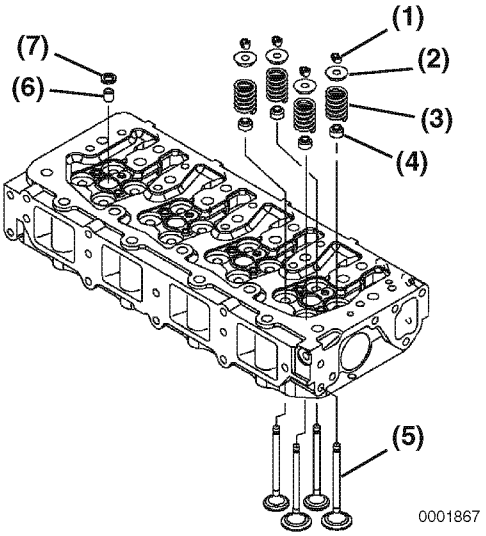

Figure 6-69

5. Place the cylinder head on the workbench with the combustion side down. Install the valve spring **(Figure 6-69, (3))** and spring retainer **(Figure 6-69, (2))**.
6. Using the valve spring compressor tool, compress the valve spring.
7. Insert the valve keepers **(Figure 6-69, (1))** and slowly release the tension in the valve spring. Repeat the steps on all the remaining valves.

Reassembly of Cylinder Head

1. Carefully clean both the combustion surface of the cylinder head and the top surface of the cylinder block. Then place a new cylinder head gasket **(Figure 6-70, (2))** on the cylinder block.
2. Position the cylinder head on the on the cylinder head gasket.

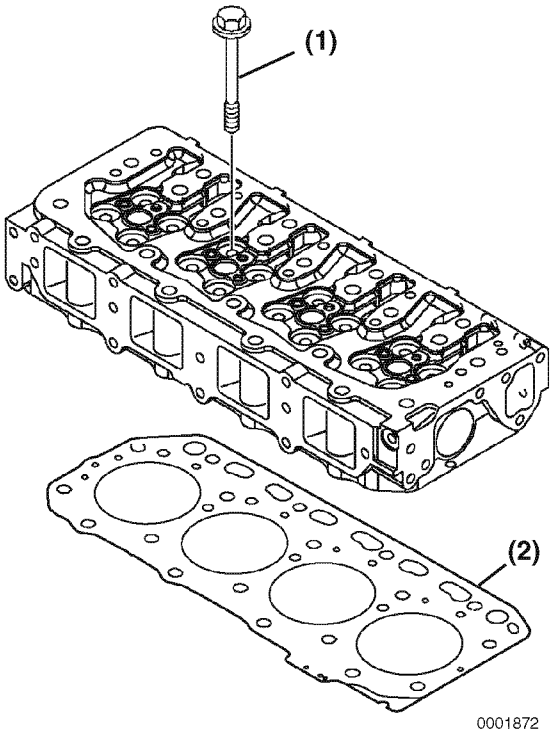

Figure 6-70

3. Lightly oil the threads of the cylinder head bolts **(Figure 6-70, (1))**. Tighten the bolts to the specified torque in two steps as shown in the chart below. Tighten in the sequence shown in **(Figure 6-71)**. *See Special Torque Chart on page 6-25 for specification.*

First Step	1/2 of final torque
Second Step	Final torque

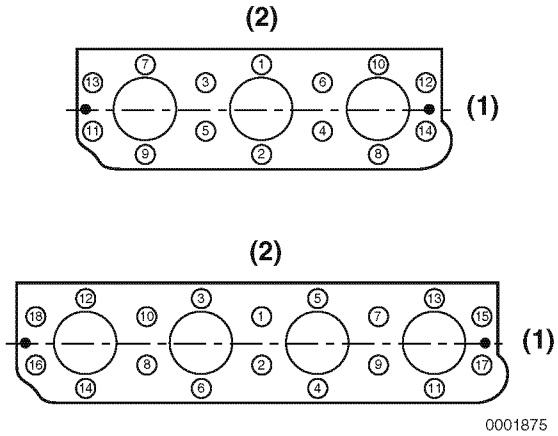

1 – Fan End
2 – Camshaft Side

Figure 6-71

Reassembly of Rocker Arm Assembly

1. Reinstall the valve bridges **(Figure 6-72, (3))** in their original locations and ensure each seat **(Figure 6-72, (4))** is in place.
2. Insert the push rods **(Figure 6-72, (2))** in their original locations.

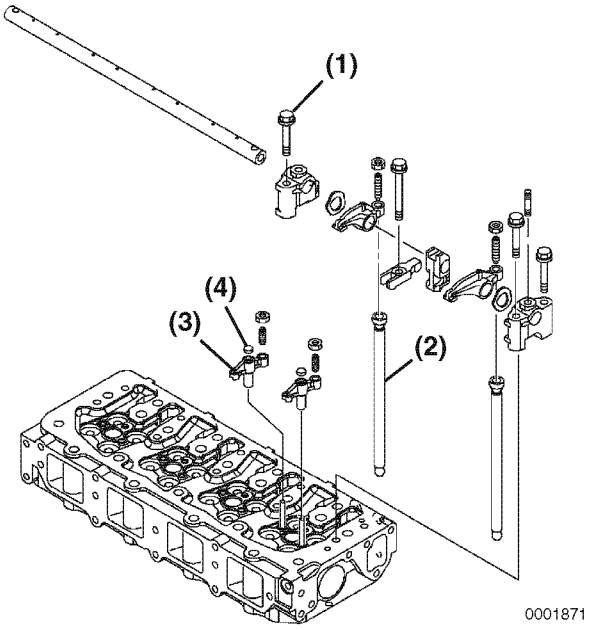

Figure 6-72

IMPORTANT

*The wave washers **(Figure 6-73, (2))** must be installed with the bow facing the rocker arms **(Figure 6-73, (1))**.*

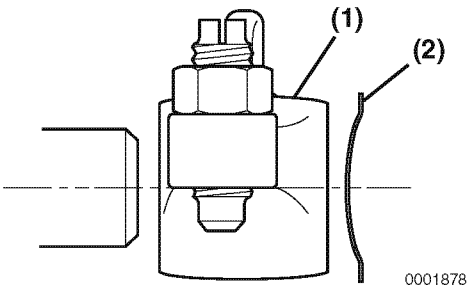

Figure 6-73

IMPORTANT

*Ensure the lubrication holes **(Figure 6-74, (1))** in the rocker arm shaft are oriented correctly with respect to the rocker arms **(Figure 6-74, (2)).***

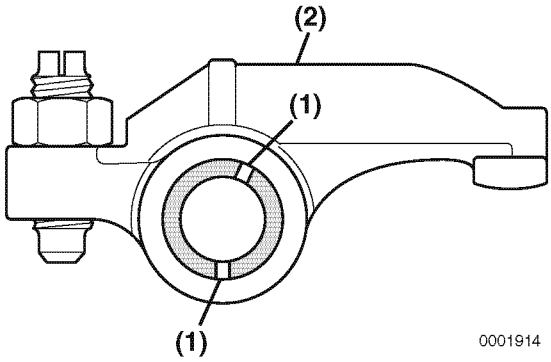

Figure 6-74

3. Lubricate the rocker arm shaft. Slide the rocker arm supports **(Figure 6-75, (6))**, wave washers **(Figure 6-75, (7))**, rocker arms **(Figure 6-75, (8))**, and fuel injector retainers **(Figure 6-75, (4))** onto the shaft.

Note: To properly align the rocker arm shaft with the rocker arm shaft supports, first reinstall one of the end rocker arm supports **(Figure 6-75, (6))** with a hole for the shaft alignment stud **(Figure 6-75, (5))**. Align the hole in the rocker arm shaft and the hole in the rocker arm support bracket. Reinstall the alignment stud.

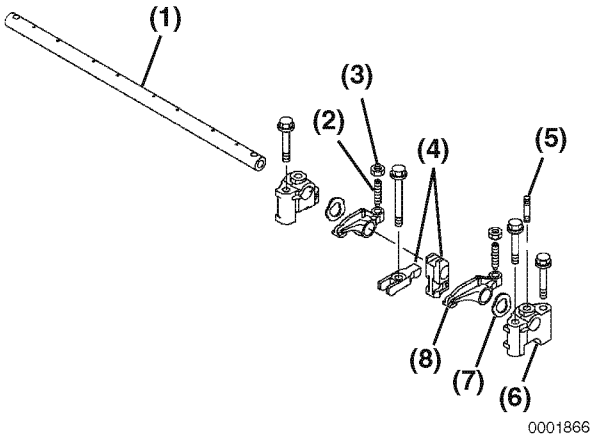

Figure 6-75

Note: **Figure 6-75** shows components for one cylinder. Components for all remaining cylinders are assembled in the same order.

4. Position the rocker arm assembly on a flat surface. Reinstall the alignment studs **(Figure 6-75, (5))**.
5. Place the rocker arm shaft assembly onto the cylinder head.
6. If removed, reinstall the valve adjusting screws **(Figure 6-75, (2))** and lock nuts **(Figure 6-75, (3))**.
7. Align the push rods with their respective rocker arms.
8. Reinstall and tighten the rocker arm shaft retaining bolts to the specified torque.
9. Tighten the rocker arm shaft alignment studs.
10. Adjust the valve clearance.
11. Reinstall the fuel injectors. *See Installation of the Fuel Injectors on page 7-42.*

Reassembly of the Valve Cover

1. Lightly grease a new valve cover gasket **(Figure 6-76, (6))**. Place the gasket in the groove of the valve cover **(Figure 6-76, (3))**.
2. Place the valve cover on the cylinder head.
3. Be sure new O-rings **(Figure 6-76, (5))** are installed on the valve cover nuts. Reinstall and tighten the valve cover nuts **(Figure 6-76, (4))**.

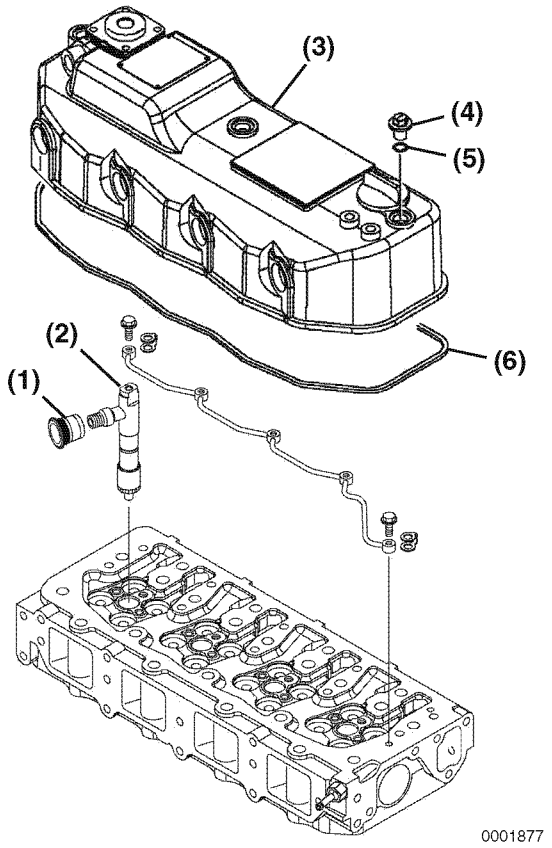

Figure 6-76

4. Reinstall the fuel injector grommets **(Figure 6-76, (1))**.
5. Reinstall the exhaust manifold using a new gasket. Tighten the bolts to specification.
6. Reinstall the intake manifold using a new gasket. Tighten the bolts to specification.
7. Reconnect the fuel injector return hose and fuel injection pump coolant hoses.
8. Reinstall the high-pressure fuel line grommets into the valve cover.
9. Reinstall the high pressure and fuel return lines. *See Installation of the Fuel Injectors on page 7-42.*
10. Reinstall the coolant pump. *See Reassembly of Engine Coolant Pump on page 8-11.*
11. Reinstall the alternator. *See Installation of Alternator on page 12-16.*
12. Reconnect the turbocharger oil supply and drain lines.
13. Reconnect the air intake hose.

MEASURING AND ADJUSTING VALVE CLEARANCE

Measure and adjust while the engine is cold.

Notes:

- The No. 1 piston position is on the flywheel end of the engine, opposite the radiator. The firing order is 1-3-2 for 3-cylinder engines and 1-3-4-2 for 4-cylinder engines.
- 3-cylinder engines fire every 240° of crankshaft rotation.
- 4-cylinder engines fire every 180° of crankshaft rotation.
- Valve clearance of both the intake and exhaust valves can be checked with the piston for that cylinder at top dead center (TDC) of the compression stroke. When a piston is at TDC of the compression stroke, both rocker arms will be loose and the cylinder TDC mark on the flywheel will be visible in the timing port of the flywheel housing.
- If there is no valve clearance, and the cylinder is at TDC of the compression stroke, extreme wear, or damage to the cylinder head or valves may be possible.
- If adjusting each cylinder individually, the cylinder to be adjusted first does not have to be the No. 1 cylinder. Select and adjust the cylinder where the piston is nearest to the top dead center after turning. Make adjustment for the remaining cylinders in the order of firing by turning the crankshaft each time.
- To decrease the number of rotations required to check all cylinders, other cylinders can also be checked as indicated in the chart below.

Example: On a 3-cylinder engine, with the No. 1 piston at TDC on the compression stroke (both valves closed), the valves indicated on the top line of the chart can be adjusted without rotating the crankshaft. To adjust the remaining two valves, rotate the crankshaft until the No. 1 piston is at TDC on the exhaust stroke (exhaust valve only open).

3-Cylinder Engines

Cylinder No.	1		2		3	
Valve	Intake	Exhaust	Intake	Exhaust	Intake	Exhaust
No. 1 Cylinder at TDC Compression	•	•	•			•
No. 1 Cylinder at TDC Exhaust				•	•	

4-Cylinder Engines

Cylinder No.	1		2		3		4	
Valve	Intake	Exhaust	Intake	Exhaust	Intake	Exhaust	Intake	Exhaust
No. 1 Cylinder at TDC Compression	•	•	•			•		
No. 4 Cylinder at TDC Compression				•	•		•	•

2-Valve Cylinder Heads

1. Remove the valve cover. *See Removal of Valve Cover on page 6-52.*

Note: If adjusting each cylinder individually, the cylinder to be adjusted first does not have to be the No. 1 cylinder. Select and adjust the cylinder where the piston is nearest to the top dead center after turning, and make adjustment for other cylinders in the order of firing by turning the crankshaft.

2. Rotate the crankshaft clockwise as seen from the coolant pump end, to bring No. 1 piston to TDC on the compression stroke while watching the rocker arm motion and timing grid on the flywheel. (Position where both the intake and exhaust valves are closed.)
3. Insert a feeler gauge **(Figure 6-77, (1))** between the rocker arm and valve cap, and record the measured valve clearance. (Use the data for estimating the wear.)

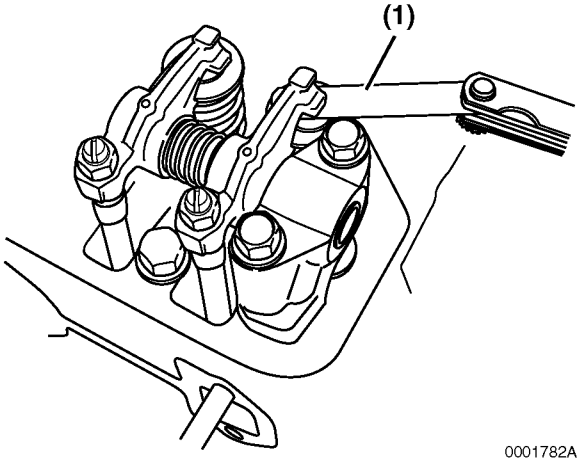

Figure 6-77

4. If adjustment is required, proceed to the next step.
5. Loosen the valve adjusting screw lock nut **(Figure 6-78, (1))** and valve adjusting screw **(Figure 6-78, (2))** on the rocker arm and check the valve for inclination of the valve cap, entrance of dirt, or wear.

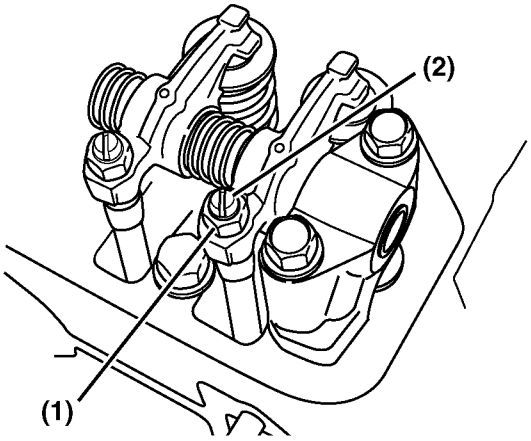

Figure 6-78

6. Insert a feeler gauge of the correct thickness **(Figure 6-79, (1))** *(see Adjustment Specifications on page 6-6)* between the rocker arm and valve cap. Turn the valve adjustment screw to adjust the valve clearance so there is a slight "drag" on the feeler gauge when sliding it between the rocker arm and the valve cap. Hold the adjusting screw while tightening the valve adjusting screw lock nut **(Figure 6-78, (1))**. Recheck the clearance.

Note: There is a tendency for the clearance to decrease slightly when the lock nut is tightened. It is suggested that you make the initial clearance adjustment slightly on the "loose" side before tightening the lock nut.

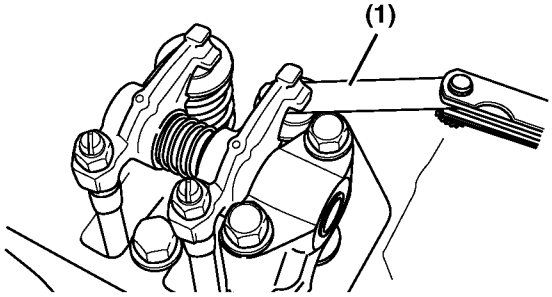

Figure 6-79

7. Apply oil to the contact surface between the adjusting screw and push rod.
8. Rotate the crankshaft. Measure and adjust the valves on the next cylinder. Continue until all the valves have been measured and adjusted.

4-Valve Cylinder Heads

The 4-valve cylinder head operates two valves with a single rocker arm by employing a valve bridge **(Figure 6-80, (1))** between the two valves **(Figure 6-80, (2))**. Clearance **(Figure 6-80, (4))** between the valve bridge and valves must be set before adjusting the clearance **(Figure 6-80, (5))** between the rocker arm **(Figure 6-80, (3))** and valve bridge.

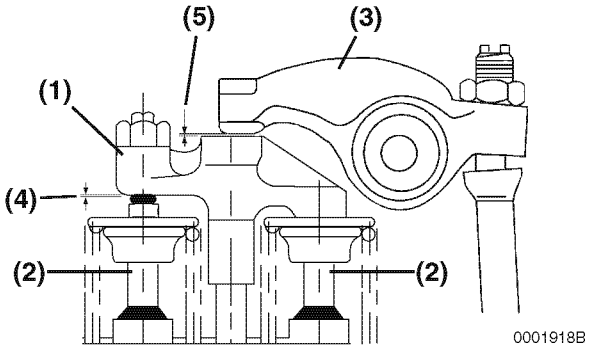

Figure 6-80

1. Remove the valve cover. *See Removal of Valve Cover on page 6-52.*

Note: If adjusting each cylinder individually, the cylinder to be adjusted first does not have to be the No. 1 cylinder. Select and adjust the cylinder where the piston is nearest to the top dead center after turning, and make adjustment for other cylinders in the order of firing by turning the crankshaft 180° each time.

2. Rotate the crankshaft clockwise as seen from the coolant pump end, to bring No. 1 piston to TDC on the compression stroke while watching the rocker arm motion and the timing grid on the flywheel. (Position where both the intake and exhaust valves are closed.)
3. Make sure there is clearance **(Figure 6-80, (5))** between the valve bridge **(Figure 6-80, (1))** and the rocker arm **(Figure 6-80, (3))**.

IMPORTANT

Do not loosen or tighten the valve adjusting screw lock nut without holding the valve bridge. Always hold the valve bridge using a wrench to prevent bending of the valve stems.

4. Loosen the valve bridge adjusting screw lock nut **(Figure 6-81, (1))** while holding the bridge **(Figure 6-81, (3))** with a wrench **(Figure 6-81, (2))**.

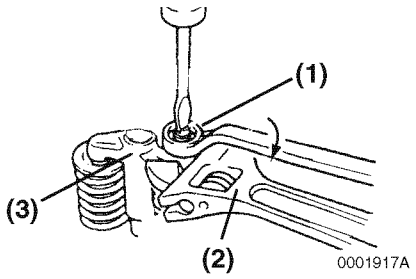

Figure 6-81

5. To assure the valve bridge contacts the rear valve, apply light, downward **(Figure 6-82, (4))** finger pressure on the valve bridge **(Figure 6-82, (3)**, and loosen the valve bridge adjusting screw **(Figure 6-82, (1))**, until there is visible clearance **(Figure 6-84, (2))** between the adjusting screw and the front valve.
6. To assure the valve bridge has equal contact with the front and rear valves, apply light downward **(Figure 6-82, (4))** pressure on the valve bridge **(Figure 6-82, (3)**, adjust the valve bridge adjusting screw **((Figure 6-82, (1))**, **(Figure 6-84, (1)))** so there is zero "0" clearance **(Figure 6-84, (2))** between the adjusting screw and the front valve.

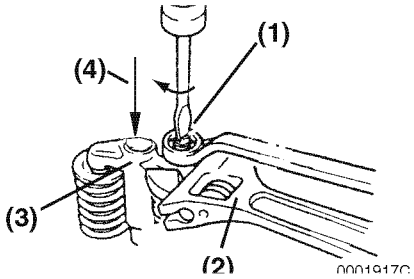

Figure 6-82

7. Tighten the lock nut **(Figure 6-83, (1))**, while holding the valve bridge **(Figure 6-83, (3))** with a wrench **(Figure 6-83, (2))**. Verify that the valve clearance **(Figure 6-84, (2)** is zero "0".

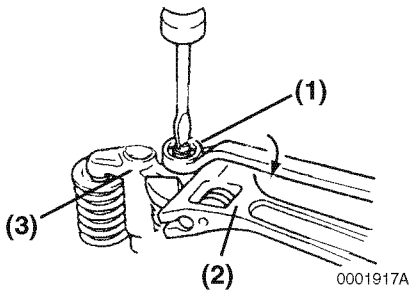

Figure 6-83

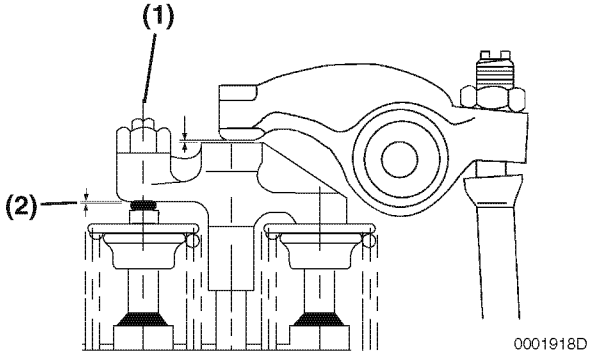

Figure 6-84

Note: There is a tendency for the clearance to decrease slightly when the lock nut is tightened. It is suggested that you make the initial clearance adjustment is made slightly on the "loose" side before tightening the lock nut.

8. To adjust the actual valve clearance between the rocker arm and the valve bridge, insert a feeler gauge **(Figure 6-85, (1))** of the correct thickness *(See Adjustment Specifications on page 6-6)* between the rocker arm **(Figure 6-85, (2))** and valve bridge **(Figure 6-85, (3))**. Record the results and use this value as an indication of wear.

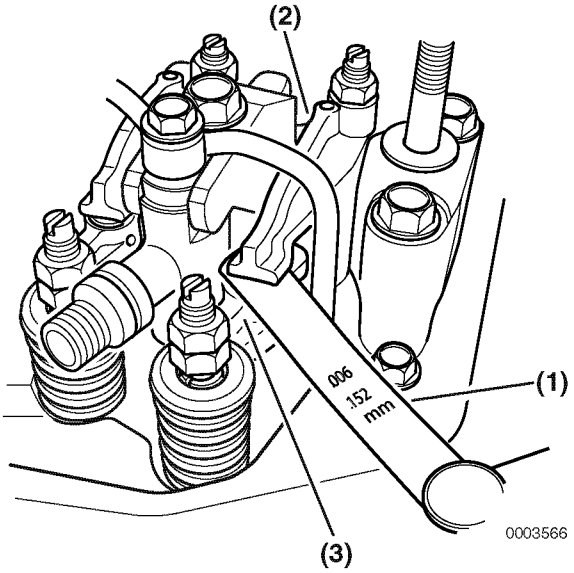

Figure 6-85

9. If adjustment is required, proceed to the next step.
10. Loosen the valve adjusting screw lock nut **(Figure 6-86, (5))** and valve adjusting screw **(Figure 6-86, (4))** on the rocker arm **(Figure 6-86, (3))** and check the clearance gap **(Figure 6-86, (2))** for evidence of dirt or wear.

Note: There is a tendency for the clearance to decrease slightly when the lock nut is tightened. It is suggested that you make the clearance adjustment is made slightly on the "loose" side before tightening the lock nut.

11. Adjust the valve clearance **(Figure 6-86, (2))** by turning the adjusting screw **(Figure 6-86, (4))** until there is a slight "drag" on the feeler gauge when sliding it between the rocker arm and the valve bridge.

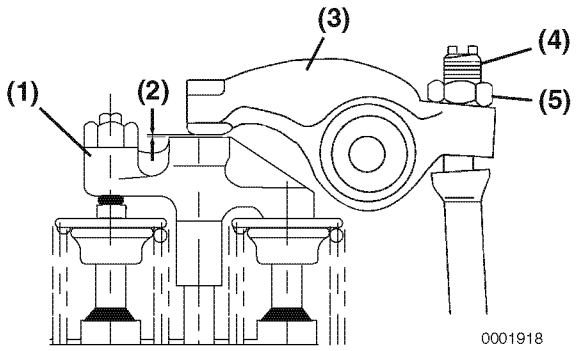

Figure 6-86

12. Hold the adjusting screw **(Figure 6-86, (4))** while tightening the valve adjusting screw lock nut **(Figure 6-86, (5))**. Recheck the clearance.
13. Apply oil to the contact surface between the adjusting screw and push rod.
14. Rotate the crankshaft to measure and adjust the set of valves. Continue until all valves are measured and adjusted.

CRANKSHAFT AND CAMSHAFT COMPONENTS

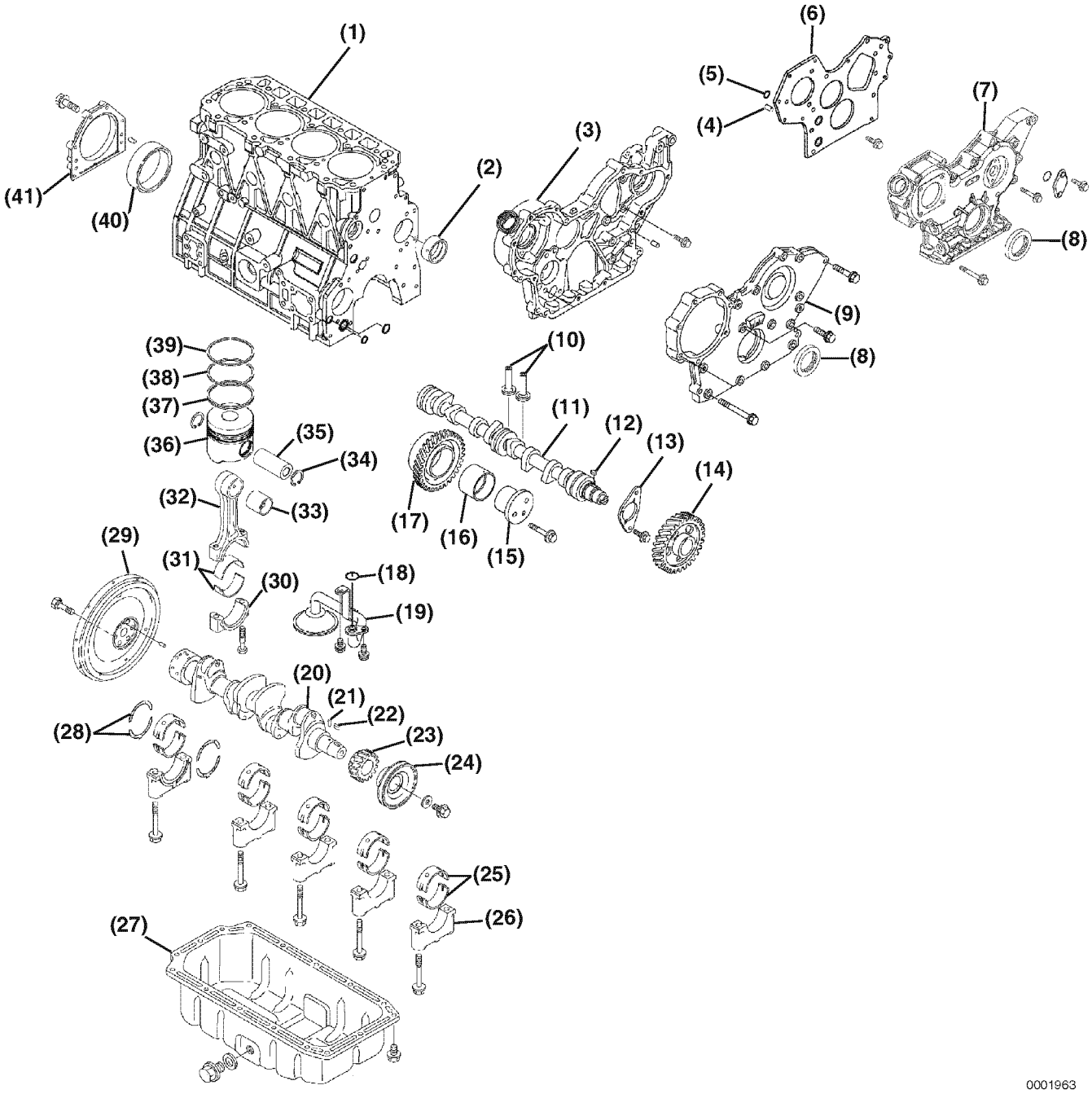

Figure 6-87

1 – Cylinder Block
2 – Camshaft Bushing
3 – Gear Case (3TNV94 - 4TNV106)
4 – Dowel (2 used)
5 – O-Ring
6 – Front Plate (3TNV82 - 4TNV88)
7 – Gear Case Cover (3TNV82 - 4TNV88)
8 – Front Crankshaft Seal
9 – Gear Case Cover (3TNV94 - 4TNV106)
10 – Tappets
11 – Camshaft
12 – Camshaft Gear Key
13 – Camshaft End Plate
14 – Camshaft Gear
15 – Idler Gear Shaft
16 – Idler Gear Bushing
17 – Idler Gear
18 – Oil Pickup O-Ring
19 – Oil Pickup
20 – Crankshaft
21 – Parallel Pin
22 – Crankshaft Gear Key
23 – Crankshaft Gear
24 – Crankshaft Pulley
25 – Main Bearing Inserts
26 – Main Bearing Cap
27 – Oil Pan
28 – Thrust Bearings
29 – Flywheel
30 – Connecting Rod Cap
31 – Connecting Rod Bearing Inserts
32 – Connecting Rod
33 – Wrist Pin Bushing
34 – Circlip
35 – Wrist Pin
36 – Piston
37 – Oil Ring
38 – Second Compression Ring
39 – Top Compression Ring
40 – Crankshaft Rear Seal
41 – Crankshaft Rear Seal Housing

Disassembly of Engine

Prepare a clean, flat working surface on a workbench large enough to accommodate the engine components. Discard all used gaskets, O-rings and seals. Use new gaskets, O-rings and seals on reassembly of engine.

CAUTION

Identify all parts and their location using an appropriate method. It is important that all parts are returned to the same position during the reassembly process.

0000080en

If the engine will be completely disassembled, the following preliminary steps should be performed:

1. Disconnect the battery cables at the battery. Always disconnect the negative (-) cable first.
2. Remove the throttle cable, electrical connections, intake and exhaust system connections, and fuel supply lines from the engine.
3. Remove the alternator. *See Removal of Alternator on page 12-12.*
4. Drain the engine coolant from the radiator and cylinder block. *See Drain, Flush and Refill Cooling System With New Coolant on page 5-36.* Remove the cooling system components from the engine.
5. Remove the engine from the machine. Mount the engine to a suitable engine repair stand having adequate weight capacity.

⚠ CAUTION

Be sure to secure the engine solidly to prevent injury or damage to parts due to the engine falling during work on the engine.

0000009en

6. Clean the engine by washing with solvent, air or steam cleaning. Carefully operate so as to prevent any foreign matter or fluids from entering the engine or any fuel system or electrical components remaining on the engine.
7. Drain the engine oil into a suitable container. Remove the oil filter.
8. Remove the cylinder head. *See 2-Valve Cylinder Head on page 6-34* or *4-Valve Cylinder Head on page 6-49.*

9. Remove the fuel injection pump from the gear case / front plate only if it must be sent out for repair, or will interfere with other procedures such as “hot tank” cleaning. If the fuel injection pump does not need to be repaired, leaving it mounted to the timing gear case or plate will eliminate the need to re-time it during reassembly. *See Fuel Injection Pump on page 7-19.*
10. Remove the starter motor. *See Removal of Starter Motor on page 11-10.*

Disassembly of Camshaft and Timing Components

Discard all gaskets, O-rings and seals. Use new gaskets, O-rings and seals on reassembly of the camshaft and timing components.

Removal of Timing Gear Case Cover

1. Remove the bolt and washer retaining the crankshaft pulley.

IMPORTANT

Use care not to damage the threads in the end of the crankshaft when removing the crankshaft pulley.

2. Remove the crankshaft pulley using a gear puller.
3. Remove the bolts that retain the gear case cover to the cylinder block and oil pan.
4. Remove the gear case cover **(Figure 6-88, (1))**.

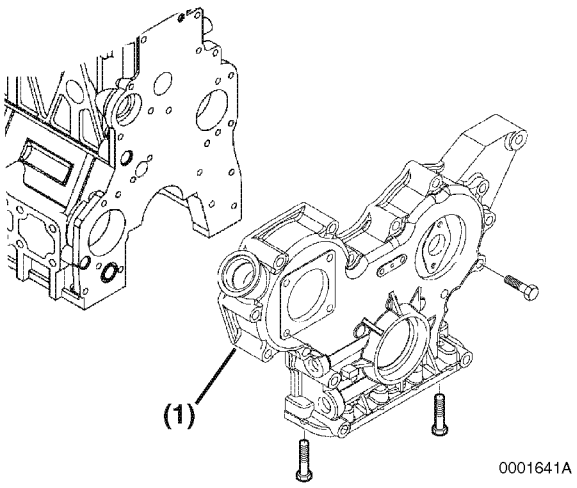

Figure 6-88

Checking Timing Gear Backlash

Prior to removing the timing gears, measure the gear backlash and determine the gear wear.

Check the backlash between each pair of mating gears **(Figure 6-89)**. If not within specification, replace both mating gears. *See Timing Gear Backlash on page 6-13 for service limits.*

Note: Do not allow the gear being checked to move axially as excess end play could cause a false reading.

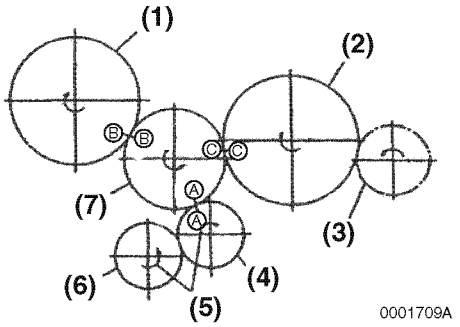

1 – Fuel Injection Pump Drive Gear
2 – Camshaft Drive Gear
3 – Auxiliary Drive Gear (Optional)
4 – Crankshaft Drive Gear
5 – Direction of Rotation
6 – Oil Pump Drive Gear (4TNV94L - 4TNV106)
7 – Idler Gear

Figure 6-89

Note: 3TNV82A - 4TNV88: The oil pump is driven directly by flats on the crankshaft drive gear hub.

Measuring Idler Gear-to-Crankshaft Gear Backlash

1. Install a dial indicator as shown in **Figure 6-90**.

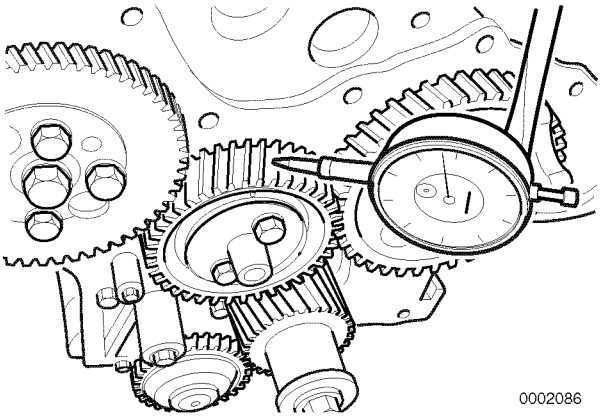

Figure 6-90

2. Rotate the idler gear back and forth to check the idler gear-to-crankshaft gear backlash. The total indicator reading is the backlash. Record the measurement.

Measuring Idler Gear-to-Camshaft Gear Backlash

1. Drive a small wooden wedge between the crankshaft gear and idler gear to prevent the idler gear from rotating.
2. Install the dial indicator to read the camshaft gear backlash. Rotate the camshaft drive gear against the idler gear to measure the backlash. Record the measurement.
3. Check the idler gear-to-fuel injection pump drive gear backlash in the same manner as the camshaft drive gear. Record the measurement.

Removal of Timing Gears

1. Remove the bolts from the idler gear shaft **(Figure 6-91, (1))**. Remove the idler gear shaft, idler gear **(Figure 6-91, (2))** and bushing **(Figure 6-91, (3)).**

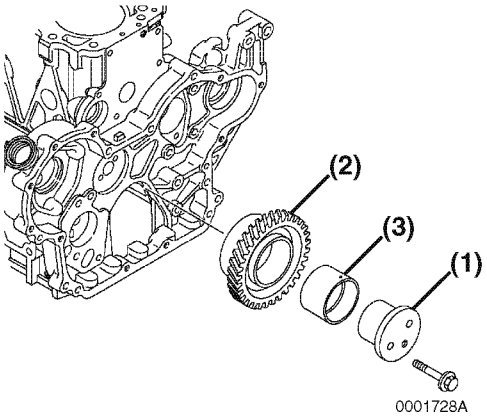

Figure 6-91

2. Do not remove the crankshaft gear unless it is damaged and requires replacement. If the gear must be removed, remove it using a gear puller.
3. Removal of the camshaft gear requires the camshaft be removed and placed in a press. Do not remove the camshaft gear unless it or the camshaft is damaged and requires replacement. *See Removal of Camshaft on page 6-76.*

CAUTION

Do not loosen or remove the four bolts retaining the fuel injection pump drive gear to the fuel injection pump hub. Do not disassemble the fuel injection pump drive gear from the hub. Correct fuel injection timing will be very difficult or impossible to achieve.

0000031en

4. Do not remove the fuel injection pump drive gear unless absolutely necessary to avoid damage to the gear or pump. Do not loosen or remove the four bolts **(Figure 6-92, (3))** retaining the pump drive gear to the hub. Only remove the nut **(Figure 6-92, (1))** and washer **(Figure 6-92, (2)),** leaving the hub attached to the gear. Remove the pump drive gear and hub as an assembly using a gear puller.

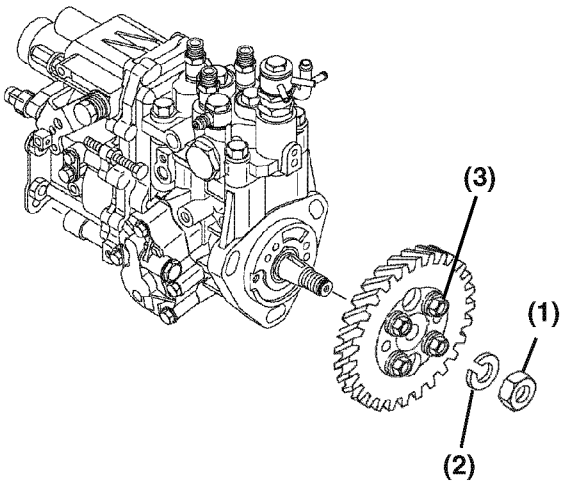

0000162A

Figure 6-92

Removal of Oil Pan

1. Invert the engine (oil pan up) on the engine stand.
2. Remove the oil pan **(Figure 6-93, (1))**.

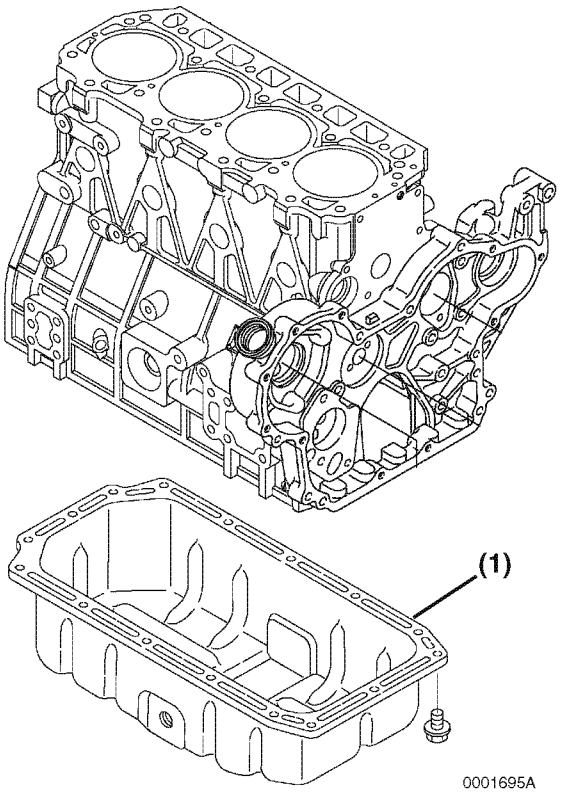

0001695A

Figure 6-93

3. Remove the oil pickup tube **(Figure 6-94, (1))** and O-ring **(Figure 6-94, (2))**.

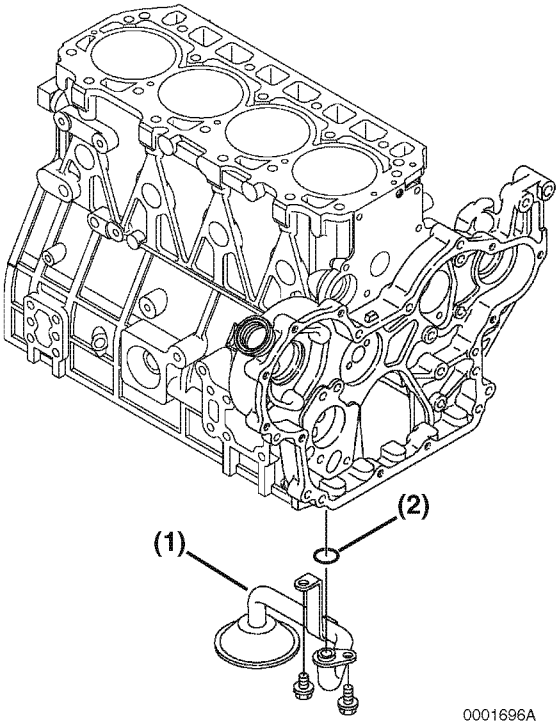

Figure 6-94

Removal of Camshaft

1. Before removing the camshaft, check the camshaft end play.
   - **Method A:** Install a dial indicator **(Figure 6-95, (1))** on the cylinder block. Move the camshaft **(Figure 6-95, (2))** back and forth to measure the end play. Record the measurement. *See Camshaft on page 6-11 for the service limit.*

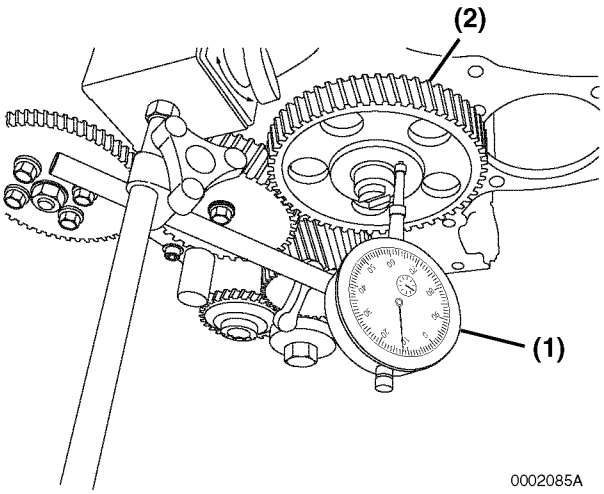

Figure 6-95

- **Method B:** Use a feeler gauge to measure the clearance between the thrust plate **(Figure 6-96, (1))** and front camshaft bearing **(Figure 6-96, (2))**. *See Thrust Bearing on page 6-15 for the service limit.*

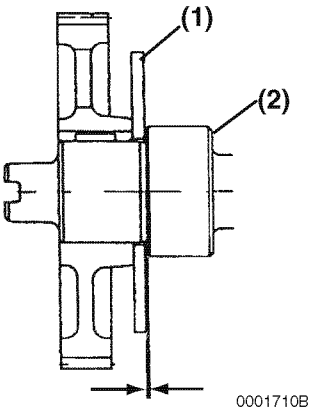

Figure 6-96

2. Remove the two bolts **(Figure 6-97, (3))** retaining the camshaft thrust plate **(Figure 6-97, (1))**.

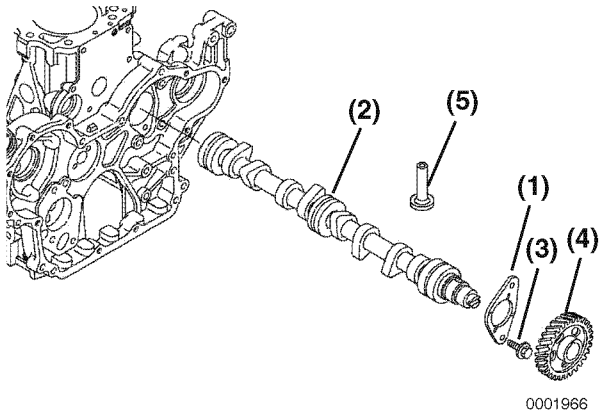

Figure 6-97

3. Rotate the engine in the engine stand so that gravity causes the tappets **(Figure 6-97, (5))** to drop away from the camshaft lobes.

Note: Rotate the camshaft at least two turns to "bump" any sticking tappets away from the camshaft.

4. Slowly pull the camshaft **(Figure 6-97, (2))** assembly out of the engine being careful not to damage the front camshaft bushing.

Note: If the engine is not installed on an engine repair fixture, stand the engine upright on the flywheel end mounting flange. Rotate the camshaft at least two turns to bump the tappets out of the way to prevent the tappets from interfering with the removal of the camshaft.

Note: The tappets are "mushroom" shaped and must be removed from inside the engine crankcase.

5. Remove the tappets. Mark the tappets so they can be reinstalled in the same location.
6. Remove the camshaft drive gear **(Figure 6-97, (4))** only if the gear or camshaft require replacement. Use a knife-edge puller and a press to remove the gear. The gear is a shrink-fit and will need to be heated to 356° - 392°F (180° - 200°C) to remove.

Removal of Gear Case or Front Plate

Note: The camshaft must be removed before the gear case / front plate can be removed. *See Inspection of Camshaft on page 6-87.*

1. **TNV94 - TNV106:** Remove the oil pump.

Note: It is not necessary to remove the fuel injection pump from the gear case / front plate to remove the gear case / front plate. If the fuel injection pump does not need to be repaired, leaving it mounted to the timing gear case / front plate will eliminate the need to re-time it during assembly. *See Fuel Injection Pump on page 7-19.*

2. Remove the bolts **(Figure 6-98, (4))**.
3. Remove the gear case **(Figure 6-98, (1))** or front plate from the cylinder block. Thoroughly clean all old sealant from the mating surfaces.
4. Inspect and measure the camshaft bushing. *See Camshaft on page 6-11 for the service limit.* If damaged or worn beyond service limits, remove the camshaft bushing **(Figure 6-98, (3))**.
5. **TNV94 - TNV106:** Remove two O-rings **(Figure 6-98, (2))**.

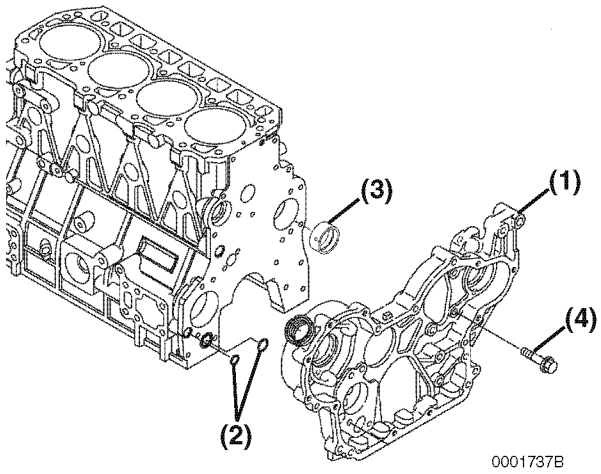

Figure 6-98

6. **TNV84 - TNV88:** Remove the O-ring **(Figure 6-99, (2))** and dowels **(Figure 6-99, (5))**.

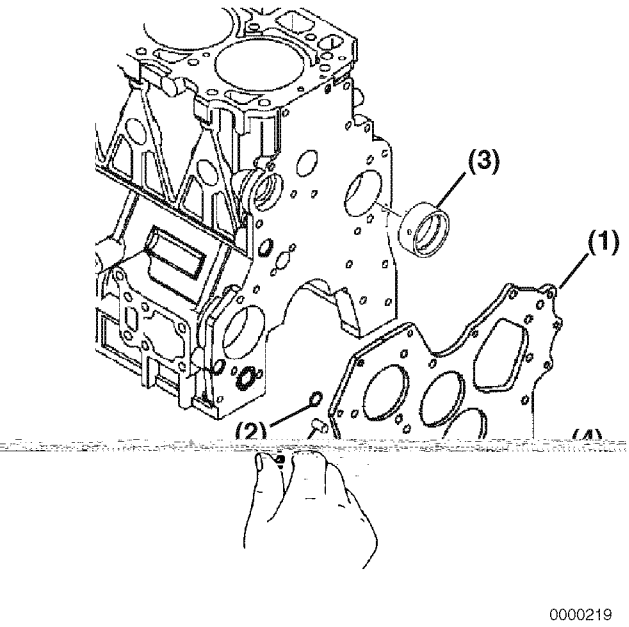

Figure 6-100

2. Measure bearing oil clearance prior to removing the pistons and connecting rods to determine extent of wear. Record the measurements.

1. Using a feeler gauge, measure the connecting rod side clearance as shown **(Figure 6-100)**. *See Connecting Rod on page 6-22 for the standard limit.* If the measurement is out of specification, replace the crankshaft, connecting rod, or both.

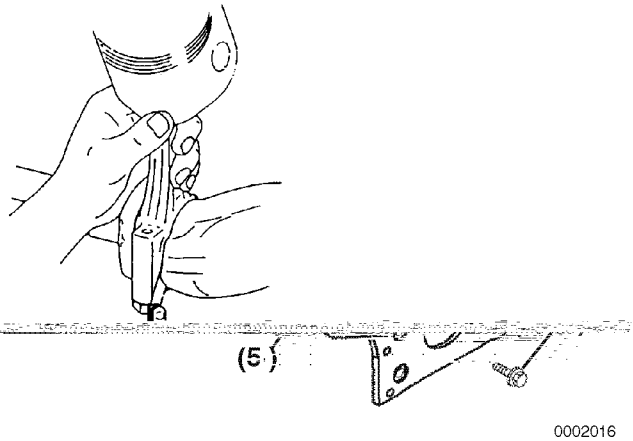

Figure 6-99

Disassembly of Crankshaft and Piston Components

Removal of Pistons

CAUTION

Keep the piston pin parts, piston assemblies, and connecting rod assemblies together to be returned to the same position during the reassembly process. Label the parts using an appropriate method.

0000088en

IMPORTANT

Engines with high operating hours may have a ridge near the top of the cylinders that will catch the piston rings and make it impossible to remove the pistons. Use a suitable ridge reamer to remove ridges and carbon prior to removing the pistons.

Note: Pistons can fall from cylinder block if the engine is inverted. Rotate the engine so the connecting rods are horizontal before removing the connecting rod caps.

IMPORTANT

Mark the connecting rod caps and connecting rods so the caps and connecting rods stay together.

(a) Remove the bearing cap. Do not remove the bearing inserts at this time.

(b) Wipe oil from the bearing insert and crankshaft journal surfaces.

(c) Place a piece of PLASTIGAGE® **(Figure 6-101, (1))** along the full width of the bearing insert.

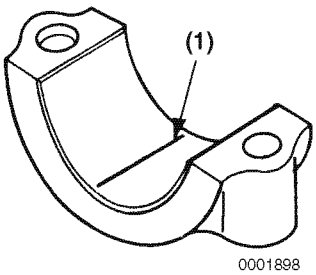

Figure 6-101

IMPORTANT

Do not rotate the crankshaft when using PLASTIGAGE. A false reading may result.

(d) Reinstall bearing cap and tighten to specification. *See Special Torque Chart on page 6-25.*

(e) Remove bearing cap.

(f) Compare the width of the flattened PLASTIGAGE to the graduation marks on the package **(Figure 6-102, (1))**. The mark that most closely matches the width of the flattened PLASTIGAGE will indicate the bearing oil clearance.

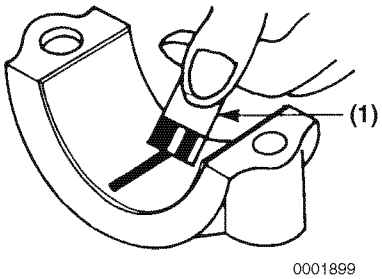

Figure 6-102

(g) Repeat with remaining connecting rods.

IMPORTANT

Do not allow the connecting rod to contact the crankshaft journal during piston removal. Damage to the bearing journal may result.

3. Use a wooden dowel against the connecting rod and tap the piston / connecting rod assembly out of the cylinder.
4. Mark the cylinder number on the piston and connecting rod.
5. Remove the bearing inserts **(Figure 6-103, (2))**.
6. Remove the compression rings **(Figure 6-103, (3))** from the piston using a piston ring expander.
7. Remove the oil ring **(Figure 6-103, (4))** from the piston using a piston ring expander.

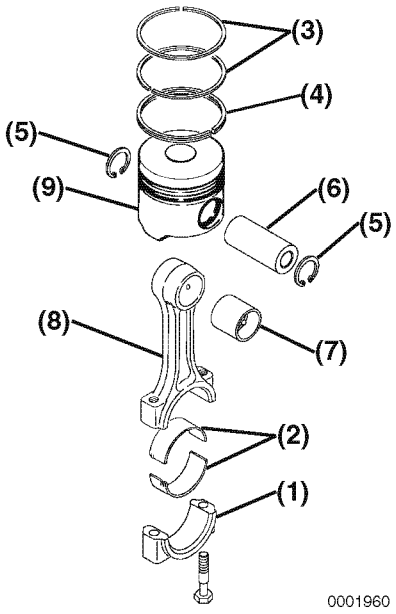

Figure 6-103

8. Remove the circlips **(Figure 6-103, (5))** from the wrist pin.
9. Remove the wrist pin **(Figure 6-103, (6))** and connecting rod **(Figure 6-103, (8))** from the piston **(Figure 6-103, (9))**.
10. Repeat the steps until all pistons are removed and dissembled.

Removal of Crankshaft

1. Remove the flywheel **(Figure 6-104, (1))** from the crankshaft.
2. Remove the bolts from the rear oil seal assembly **(Figure 6-104, (2-3))**. Remove the assembly from the engine.

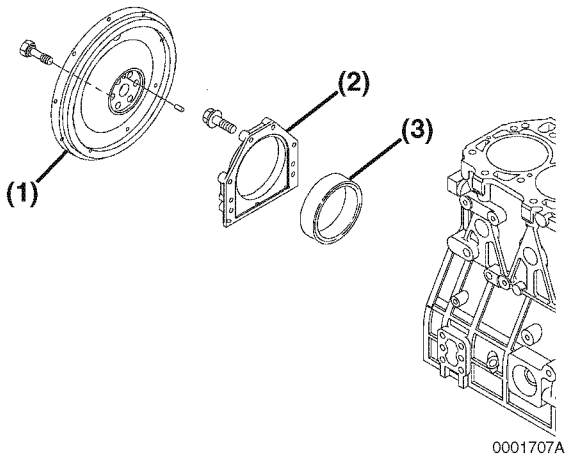

Figure 6-104

3. Before removing the main bearing caps, measure the crankshaft end play. Use either of the following two methods.
   - **Method A:** Install a dial gauge **(Figure 6-105, (1))** on the cylinder block. Move the crankshaft **(Figure 6-105, (2))** in and out to measure the end play. Record the measurement.

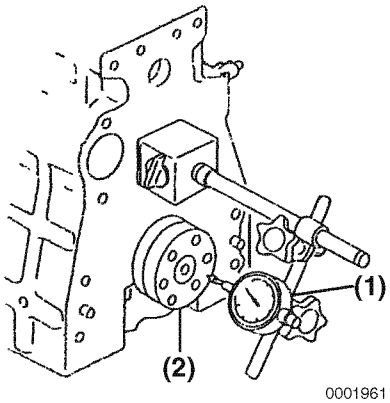

Figure 6-105

   - **Method B:** Use a feeler gauge to measure the clearance **(Figure 6-106, (3))** between the thrust bearing **(Figure 6-106, (1))** and crankshaft **(Figure 6-106, (2))**. Record the measurement. *See Thrust Bearing on page 6-15 for the service limit.*

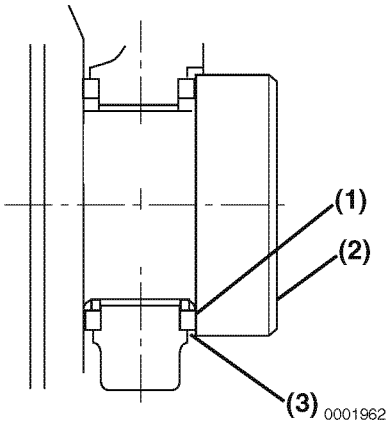

Figure 6-106

4. Remove the main bearing caps **(Figure 6-107, (3))**. Be sure to note the markings on the main bearing caps, or mark them yourself, so they can be reinstalled in the same order as they were removed. Do not remove the bearing inserts at this time.

Note: The "arrows" on the main bearing caps point to the flywheel end of the engine.

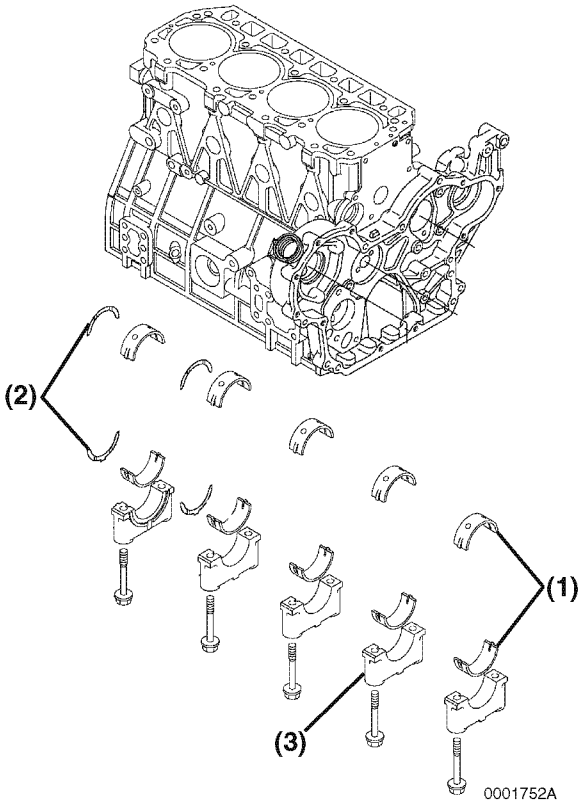

Figure 6-107

5. Measure bearing oil clearance prior to removing the crankshaft to determine extent of wear. Record the measurements.
   (a) Wipe oil from the bearing insert and crankshaft journal surfaces.
   (b) Place a piece of PLASTIGAGE **(Figure 6-108, (1))** along the full width of each bearing insert.

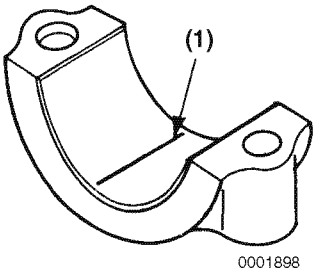

Figure 6-108

IMPORTANT

Do not rotate the crankshaft when using PLASTIGAGE. A false reading may result.

   (c) Reinstall bearing caps and tighten to specification. *See Special Torque Chart on page 6-25.*
   (d) Remove bearing caps.
   (e) Compare the width of the flattened PLASTIGAGE to the graduation marks on the package **(Figure 6-109, (1))**. The mark that most closely matches the width of the flattened PLASTIGAGE will indicate the bearing oil clearance.

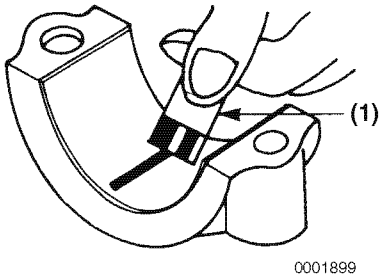

Figure 6-109

6. Remove the crankshaft from the engine.
7. Remove the bearing inserts **(Figure 6-107, (1))** and thrust bearings **(Figure 6-107, (2))**.

Note: Do not remove the crankshaft gear unless the gear or crankshaft are damaged and require replacement.

8. If necessary, remove the crankshaft gear **(Figure 6-110, (1)),** parallel pin **(Figure 6-110, (2))** and key **(Figure 6-110, (3)).** If using a gear puller, be careful not to damage the threads in the end of the crankshaft.

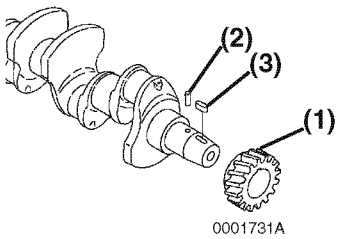

Figure 6-110

Inspection of Crankshaft and Camshaft Components

WARNING

FUME / BURN HAZARD!

- **Always read and follow safety related precautions found on containers of hazardous substances like parts cleaners, primers, sealants and sealant removers.**
- **Failure to comply could result in death or serious injury.**

0000014en

Thoroughly clean all components using a brush and appropriate solvent. Each part must be free of carbon, gasket material, metal filings and other debris.

Replacement of Crankshaft Oil Seals

1. Remove the seal **(Figure 6-111, (2))** from the cover **(Figure 6-111, (1)).**
2. Apply a continuous bead of ThreeBond Liquid Gasket No. 1212, Yanmar Part No. 977770-01212 to the outside diameter of a new oil seal **(Figure 6-111, (2)),** and install in the gear case cover. Apply lithium grease to the lip of the seal.

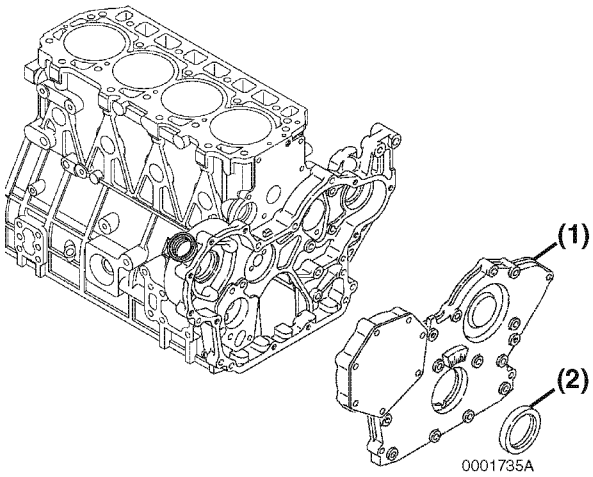

Figure 6-111

3. Remove the rear oil seal **(Figure 6-112, (3))** from the seal housing **(Figure 6-112, (2)).**
4. Apply a continuous bead of ThreeBond Liquid Gasket No. 1212, Yanmar Part No. 977770-01212 to the outside diameter of a new oil seal **(Figure 6-112, (2)),** and install in the housing. Apply lithium grease to the lip of the seal.

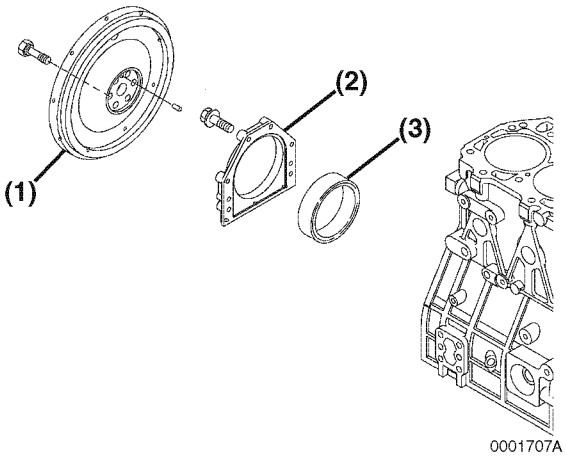

Figure 6-112

Measure Crankshaft Bearing Oil Clearance

Oil clearance should be checked during disassembly to determine the extent of wear, and during assembly to ensure long engine life. The same procedure is done for both connecting rods and main bearings.

Inspection of Cylinder Block

1. Ensure that oil passages are clear and unobstructed.
2. Check for discoloration or evidence of cracks. If a fracture is suspected, use the color check method or the Magnaflux method to determine if the cylinder block is fractured.
3. Inspect cylinders for roundness, taper, or evidence of scoring. Collect and record the measurements. Consider honing, reboring or replacing the cylinder block if the measurements are not within specification.
   - Take measurements at three places **(Figure 6-113)** (a, b, c), and in two directions (d and e) in each cylinder.

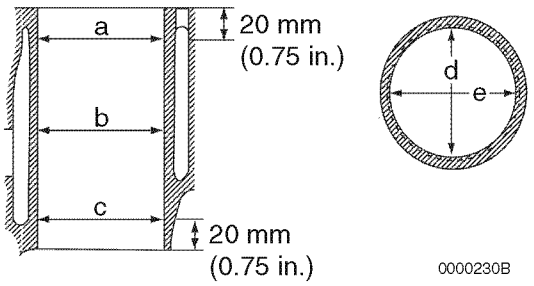

Figure 6-113

Inspection of Pistons, Piston Rings and Wrist Pin

Notes:

- On an engine with low hours, the pistons, piston rings may be reused if they are found to be within specifications. The pistons and piston rings must be reinstalled in the same cylinders from which they were originally removed.
- On an engine with high hours, the pistons rings should be replaced and the cylinder honed *(See Honing and Boring on page 6-88)* or replaced. The piston should be replaced as necessary.

1. Clean piston ring grooves using a piston ring groove cleaning tool. Follow manufacturer's instructions for correct operation.
2. Wash the pistons in an appropriate solvent using a soft brush.
3. Visually inspect each piston for cracks. Pay particular attention to the ring lands between the piston ring grooves.
4. Measure the diameter of the piston skirt at 90° to the wrist pin bore as shown **(Figure 6-114)**. Measurements must be taken at a specified distance **(Figure 6-114, (1))** from the bottom of the piston, based on engine model. Record the measurements. *See Piston on page 6-16 for specifications.*

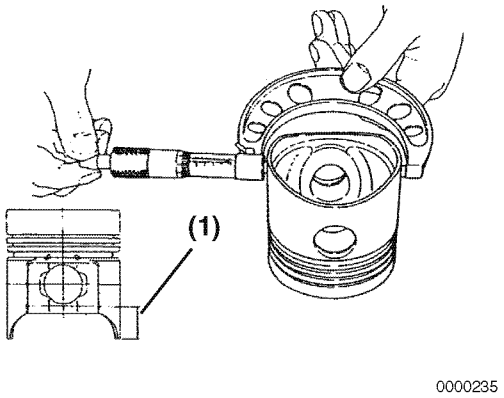

Figure 6-114

5. Subtract the piston measurement from the greatest measurement acquired during cylinder inspection *(see Inspection of Cylinder Block on page 6-83)* to obtain piston-to-cylinder clearance. Record the measurements. *See Piston on page 6-16 for specifications.*
6. Measure the diameter of the wrist pin bore on both sides of the piston **(Figure 6-115)**. *See Piston on page 6-16 for specifications.* Record the measurements.

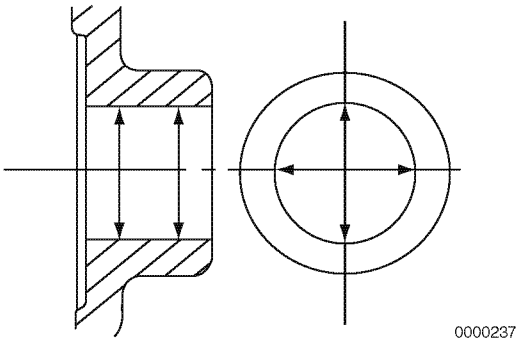

Figure 6-115

7. Measure the outside diameter of the wrist pin in three places and at 90° **(Figure 6-116)**. *See Piston on page 6-16 for specifications.* Record the measurements.

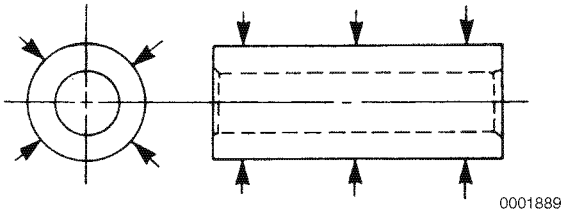

Figure 6-116

8. Using a micrometer, measure the thickness of each piston ring. *See Piston on page 6-16 for specifications.* Record the measurements.

   Notes:

   - On an engine with low hours, the pistons, piston rings and cylinders may be reused if they are found to be within specifications.
   - On an engine with high hours, the pistons rings should be replaced and the cylinder honed *(see Honing and Boring on page 6-88)* or replaced. The piston should be replaced as necessary.

9. Place each compression piston ring in the groove as shown **(Figure 6-117)**. Use a feeler gauge to measure the clearance between the piston ring and the piston ring land. Record the measurements. *See Piston Ring on page 6-18 for specifications.* Replace the piston if not within specification.

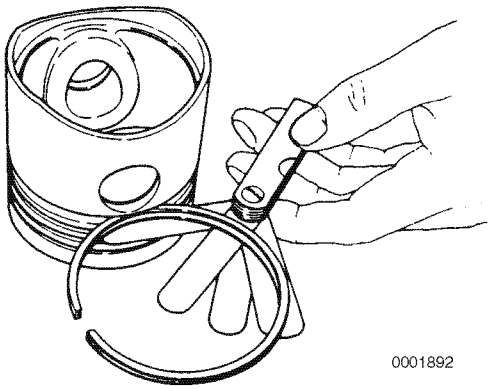

Figure 6-117

10. To measure piston ring end gap, insert each compression piston ring **(Figure 6-118, (1))**, one at a time, into the cylinder. Use a piston with the piston rings removed to slide the ring into the cylinder bore until it is approximately 1.18 in. (30 mm) **(Figure 6-118, (2))** from the bottom of the bore. Remove the piston. Measure the end gap **(Figure 6-118, (3))** of each piston ring. Record the measurements. *See Piston Ring on page 6-18 for specifications.*

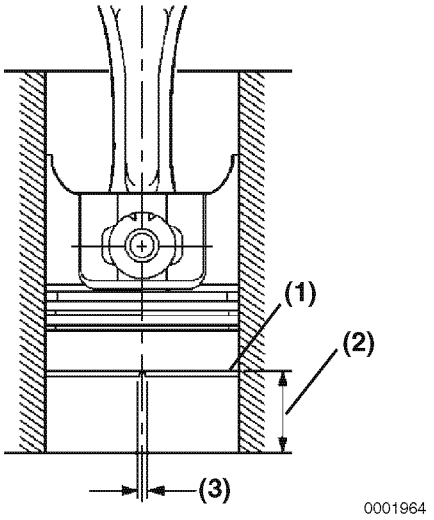

Figure 6-118

Note: Always check the piston ring end gap when installing new piston rings. *See Piston Ring on page 6-18 for specifications.* Use a piston ring end gap filing tool to adjust the piston ring end gap on new piston rings.

11. Repeat the above steps for each cylinder and piston assembly.

Inspection of Connecting Rod

1. Measure the wrist pin bushing bore using a bore gauge **(Figure 6-119, (1))**. Replace the bushing if not within specifications. If the bushing has been removed, measure the inside diameter of the connecting rod small end **(Figure 6-119, (2))**. *See Connecting Rod on page 6-22 for specifications.*

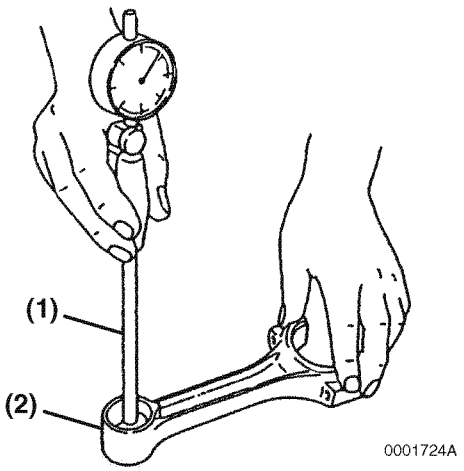

Figure 6-119

2. Place the connecting rod bearing inserts into the connecting rod and connecting rod cap. Install the rod cap and tighten the bolts to the specified torque.
3. Measure the inside diameter. *See Crankshaft on page 6-14 for specifications.*

Inspection of Tappets

1. Inspect the tappet contact surfaces for abnormal wear **(Figure 6-120, (1))**. Normal wear will be even as shown in **(Figure 6-120, (2)).** Slight surface defects can be corrected using an oilstone.

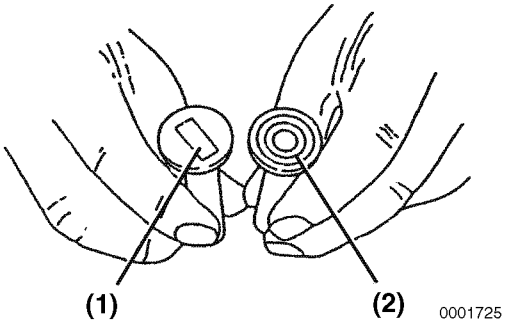

Figure 6-120

2. Measure the outside diameter of the tappet stem **(Figure 6-121, (1))**. *See Tappet on page 6-23 for the service limit.*

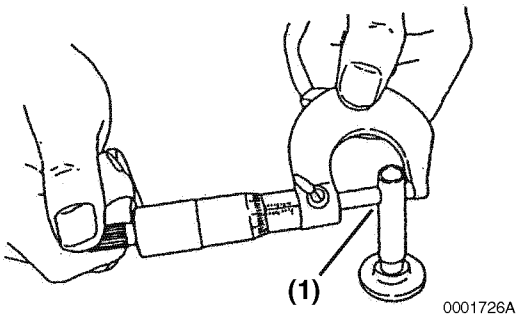

Figure 6-121

3. Measure the tappet bores in the cylinder block. *See Tappet on page 6-23 for the service limit.*

Inspection of Crankshaft

1. Place the crankshaft end journals **(Figure 6-122, (4))** on V-blocks.
2. Place a dial indicator **(Figure 6-122, (3))** on a center main bearing surface.

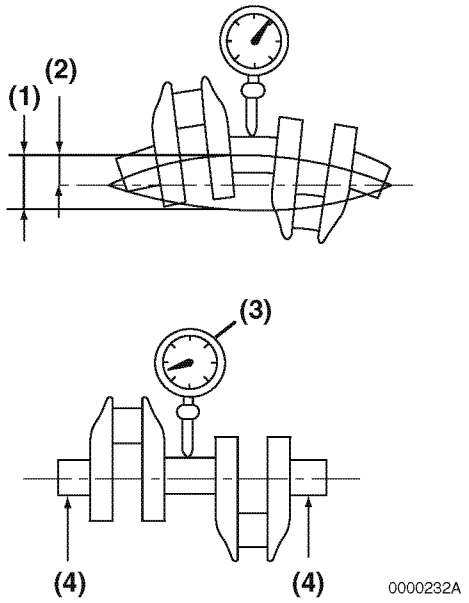

Figure 6-122

3. Rotate the crankshaft and observe runout. *See Crankshaft on page 6-14 for specifications.*
4. Use the color check method or Magnaflux® to inspect the crankshaft for cracks. Replace the crankshaft if evidence of fractures are found.
5. Measure the outside diameter of each crankpin **(Figure 6-123, (2))** and main bearing journal **(Figure 6-123, (1))**. *See Crankshaft on page 6-14 for specifications.* Take measurements at several places around each bearing surface. If not within specification, grind the journals and install undersize bearings, or replace the crankshaft.

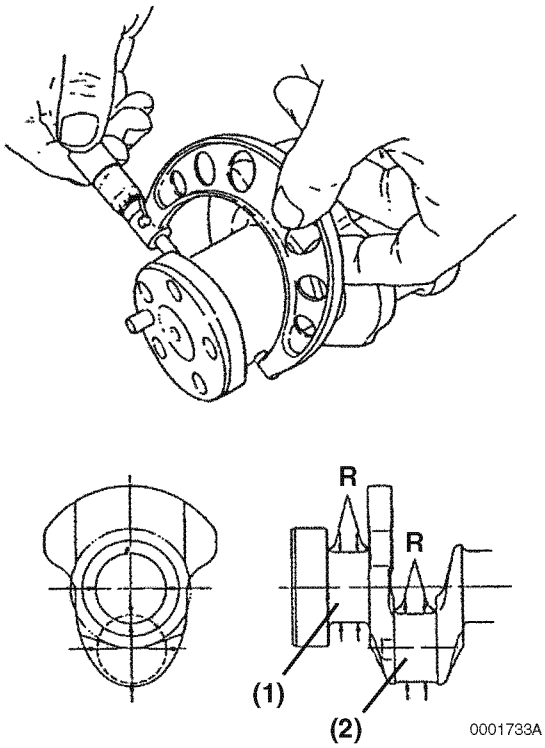

Figure 6-123

Inspection of Camshaft

1. Use V-blocks and a dial indicator to check camshaft bend **(Figure 6-124)**. Place the indicator on the center bearing journal.

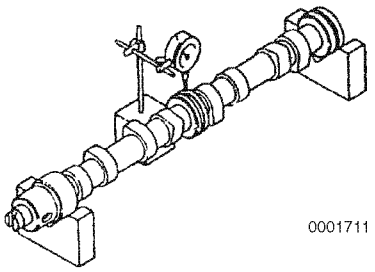

Figure 6-124

2. Rotate the camshaft and observe the runout. *See Camshaft on page 6-11 for specifications.*
3. Measure the height of each lobe **(Figure 6-125, (1))**. *See Camshaft on page 6-11 for specifications.*

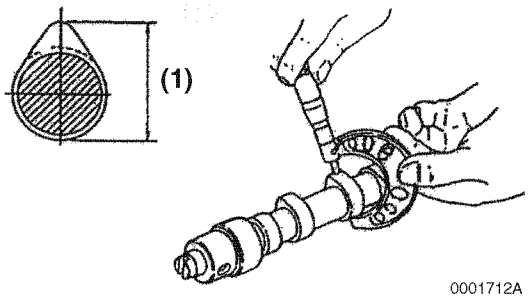

Figure 6-125

4. Measure the diameter of the gear end **(Figure 6-126, (1))**, intermediate **(Figure 6-126, (2))**, and flywheel end **(Figure 6-126, (3))** bearing journals. *See Camshaft on page 6-11 for specifications.*

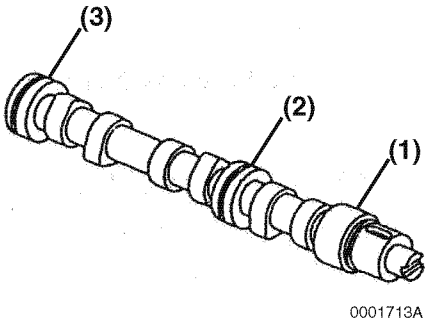

Figure 6-126

Inspection of Camshaft Bushing and Bores

1. Measure the I.D. of the front bushing and the remaining bores in the cylinder block. *See Camshaft on page 6-11 for specifications.*
2. If the camshaft bushing is not within specification, replace it using the appropriate service tool. If the remaining bores are not within specification, the cylinder block will require replacement as there are no bearing inserts used.

Inspection of Idler Gear and Shaft

1. Measure the outside diameter **(Figure 6-127, (1))** of the idler gear shaft **(Figure 6-127, (2))**. *See Idler Gear Shaft and Bushing on page 6-13 for specifications.*
2. Measure the inside diameter **(Figure 6-127, (3))** of the idler gear bushing **(Figure 6-127, (4))**. *See Idler Gear Shaft and Bushing on page 6-13 for specifications.*

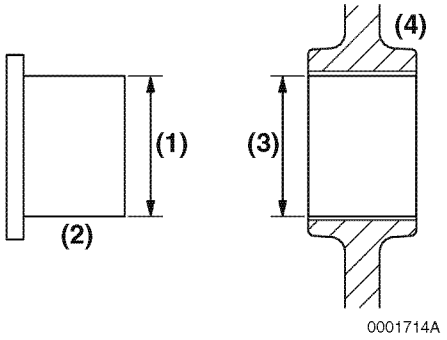

Figure 6-127

Honing and Boring

Pistons must move freely in the cylinders while maintaining adequate compression and oil sealing. If the cylinder walls are scuffed, scored, out-of-round, or tapered beyond specifications, rebore and hone to restore cylinders to usable condition. Slight imperfections can be corrected by honing alone.

1. **Boring** - Significant cylinder damage may be corrected by boring the cylinder to an oversize dimension. Refer to the appropriate parts catalog for available oversize pistons and piston rings.
   - Boring a cylinder should always be done in a properly equipped machine shop.
   - A bored cylinder should always be finished with a hone to properly prepare the cylinder surface so the new piston rings will seat properly.
   - After the cylinder has been bored and honed, install the appropriate oversize pistons and piston rings.
2. **Honing** - Minor cylinder imperfections may be corrected by using a rigid cylinder hone **(Figure 6-129, (1))**. Be sure not to exceed the maximum cylinder bore specification.

   Deglazing - A used cylinder that did not require boring or honing, should always be deglazed with a ball hone **(Figure 6-129, (2))** before installing new piston rings. This will properly prepare the cylinder surface to allow new piston rings to seat properly.

Note: When honing a cylinder, with either a ridged hone or a ball hone **(Figure 6-128, (1))**, move the rotating hone up and down in the cylinder bore to accomplish a 30° to 40° crosshatch pattern **(Figure 6-128)**. This will provide the ideal surface for the proper seating of new piston rings.

CAUTION

Do not allow the honing tool to operate in one position for any length of time. Damage to the cylinder wall will occur. Keep the tool in constant up-and-down motion.

0000090en

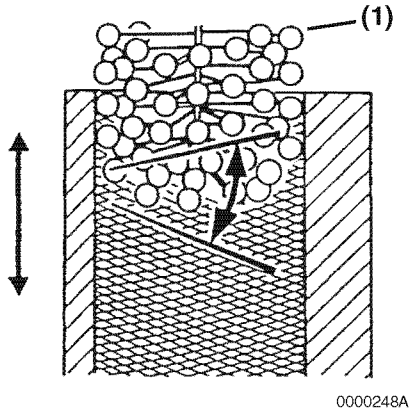

Figure 6-128

- Use a 50:50 mixture of diesel fuel and engine oil as a honing fluid.
- Use a 300-grit hone at 300 - 1200 rpm **(Figure 6-129)**.

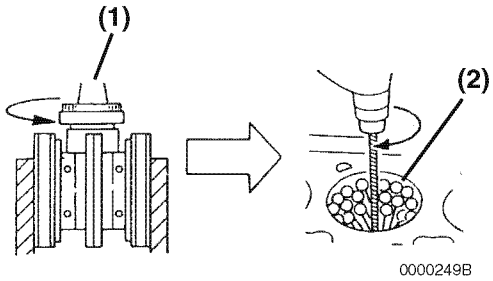

Figure 6-129

IMPORTANT

Solvents will not adequately remove honing residue, resulting in premature piston and ring wear. Always wash cylinders using hot, soapy water.

- When honing is completed, wash the cylinder block with hot water and soap. The cylinder wall is adequately cleaned when a white rag wiped in cylinder comes out clean. Use brushes to clean all passages and crevices. Rinse with hot water and dry with compressed air. Apply clean engine oil to all steel surfaces to prevent rusting.

Reassembly of Crankshaft and Piston Components

Notes:

- Proceed slowly. Make no forced assemblies unless a pressing operation is called for. All parts must be perfectly clean and lightly lubricated when assembled.
- Use new gaskets, seals and O-rings during assembly.
- Liberally apply clean engine oil to all internal parts during assembly.
- All fasteners should be tightened to a given torque. If a special torque is not provided in the *Special Torque Chart on page 6-25*, tighten to standard torque specifications. *See Tightening Torques for Standard Bolts and Nuts on page 4-46.*

Reassembly of Pistons

1. Select the parts needed to reassemble the piston and connecting rod for one cylinder.
2. If removed, install a new wrist pin bushing **(Figure 6-130, (7))** using a press and the appropriate service tool. Be sure to align the oil holes.

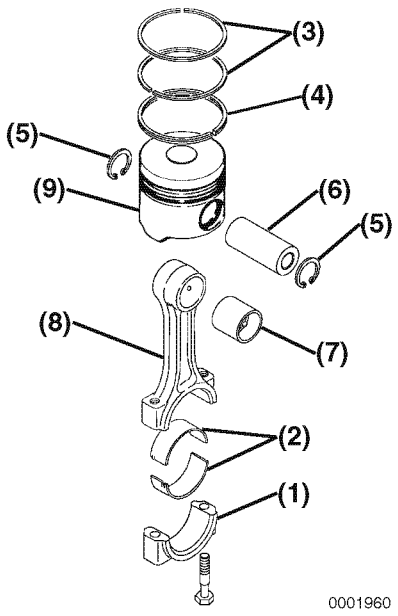

Figure 6-130

3. Reinstall one circlip **(Figure 6-130, (5))** into the piston. Ensure the circlip is securely seated in the groove.

IMPORTANT

The piston and connecting rod must be assembled together in the correct orientation. The orientation of the piston and connecting rod are ***different*** *depending on engine model.*

Piston to Connecting Rod Orientation - By Model	
All TNV models - 82, 84(T), 88, 94, and 98(T)	Only TNV models - 106(T)
Orient the piston identification mark stamped on top of the piston on the same side as the rod and cap match marks stamped on the connecting rod.	Orient the piston identification mark stamped on top of the piston on the opposite side as the rod and cap match marks stamped on the connecting rod.

Note: The actual appearance of the match marks on the piston and connecting rod may vary, but they will always be in the same locations.

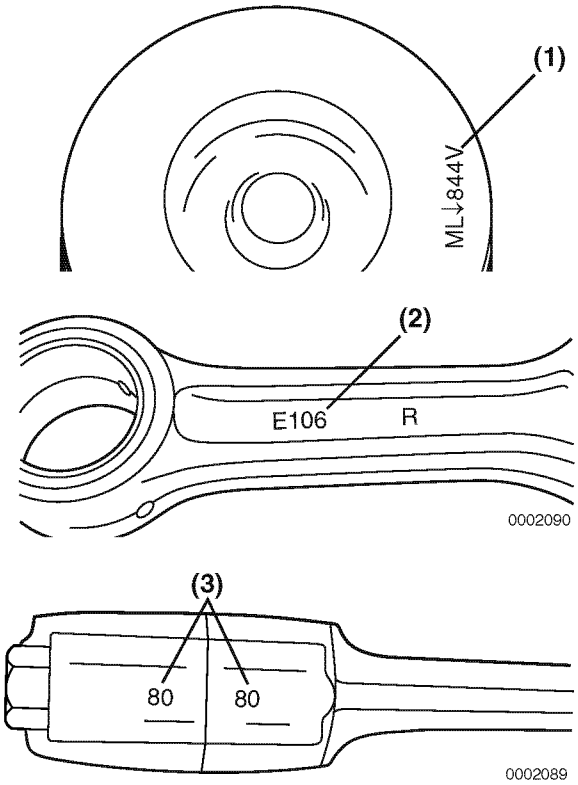

1 – Piston Identification Mark
2 – Embossed Mark on Connecting Rod
3 – Rod and Cap Match Marks

Figure 6-131

Piston Assembly - All TNV models - 82, 84(T), 88, 94, and 98(T)

When correctly assembled, the piston identification mark **(Figure 6-132, (2))** stamped into the top of the piston will be on the same side of the connecting rod as the match marks **(Figure 6-132, (4))** stamped into the connecting rod and connecting rod cap.

When installed in the cylinder, the piston identification mark **(Figure 6-132, (2))** stamped on the top of the piston must face the fuel injection pump side **(Figure 6-132, (1))** of the engine and the embossed mark on the connecting rod **(Figure 6-132, (3))** must face the flywheel end **(Figure 6-132, (5))** of the engine.

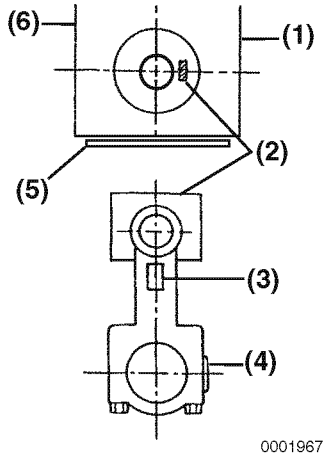

1 – Fuel Injection Pump Side of Engine
2 – Piston Identification Mark
3 – Embossed Mark on Connecting Rod
4 – Rod and Cap Match Marks
5 – Flywheel End of Engine
6 – Camshaft Side of Engine

Figure 6-132

Piston Assembly - Only TNV models 106(T)

When correctly assembled, the identification mark **(Figure 6-133, (2))** stamped into the top of the piston will be on the opposite side of the connecting rod as the match marks **(Figure 6-133, (4))** stamped into the connecting rod and connecting rod cap.

When installed in the cylinder, the piston identification mark **(Figure 6-133, (2))** stamped on the top of the piston must face the camshaft side **(Figure 6-133, (6))** of the engine and the embossed mark on the connecting rod **(Figure 6-133, (3))** must face the flywheel end **(Figure 6-133, (5))** of the engine.

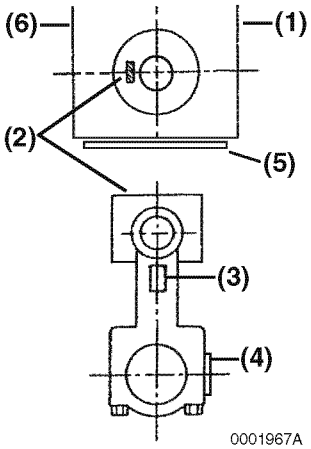

1 – Fuel Injection Pump Side of Engine
2 – Piston Identification Mark
3 – Embossed Mark on Connecting Rod
4 – Rod and Cap Match Marks
5 – Flywheel End of Engine
6 – Camshaft Side of Engine

Figure 6-133

1. Lubricate and reinstall the wrist pin **(Figure 6-134, (3))** through the piston and connecting rod.
2. Reinstall the second circlip **(Figure 6-134, (4))** and ensure it is securely seated in the groove.

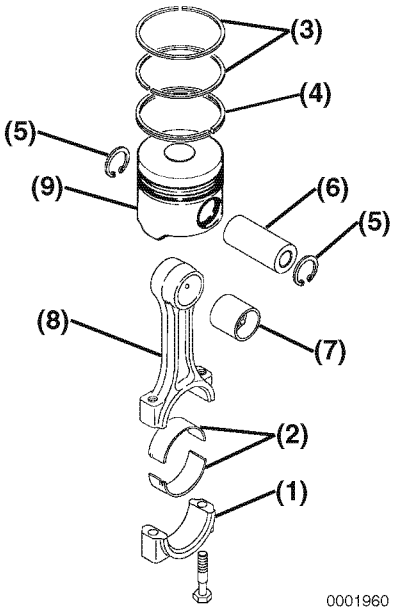

Figure 6-134

Note: If installing new piston rings the end gap must be checked and adjusted as necessary. *See Inspection of Pistons, Piston Rings and Wrist Pin on page 6-83 for specifications.* Use a piston ring end gap filing tool to adjust the piston ring end gap on new piston rings.

Note: Reinstall the top and second piston rings with the stamped “makers mark” **(Figure 6-135, (1))** facing the top of the piston. The “makers mark” may vary in appearance but will always be located on the top surface of the piston ring adjacent to the piston ring gap. The oil ring and oil ring expander can be installed either side up.

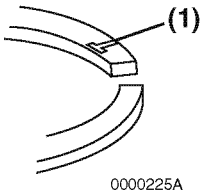

Figure 6-135

IMPORTANT

Always use a piston ring installation tool (expander) when installing piston rings. Never attempt to install piston rings by hand.

3. Reinstall the oil ring expander **(Figure 6-136, (4))**. Reinstall the oil ring **(Figure 6-136, (3))** with the end gap at 180° from the expander end gap.
4. Reinstall the second compression ring **(Figure 6-136, (2)).** This ring is identified by its dark color and tapered face profile.
5. Reinstall the top compression ring **(Figure 6-136, (1))**. This ring is identified by its silver color and barrel-shaped face profile.

IMPORTANT

*The oil ring expander **(Figure 6-136, (4))** end gap must be located 180° from the oil ring **(Figure 6-136, (3))** end gap.*

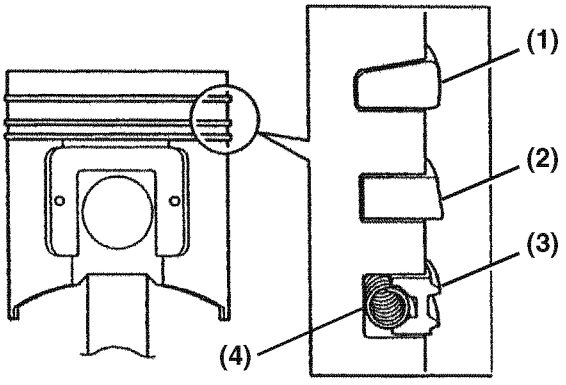

Figure 6-136

6. Stagger the piston ring end gaps at 120° intervals **(Figure 6-137, (1, 2, 3))**. Do not position the top piston ring end gap in line with the wrist pin.

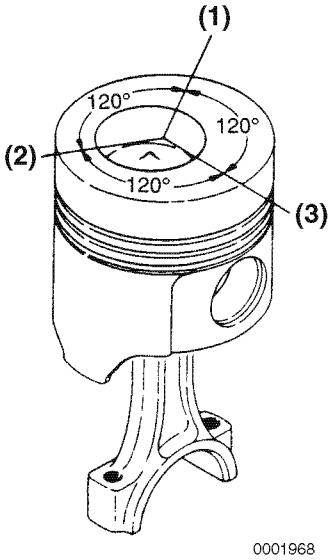

1 – Top Compression Ring End Gap
2 – Second Compression Ring End Gap
3 – Oil Ring End Gap

Figure 6-137

Installation of Crankshaft

1. If removed, reinstall the keys and timing gear on the crankshaft.
2. Reinstall new bearing inserts **(Figure 6-138, (1))** and thrust bearing **(Figure 6-138, (2))** in the cylinder block and main bearing caps. Apply a liberal coat of clean engine oil to the bearings and crankshaft journals.
3. Place the crankshaft into the engine.

IMPORTANT

The main bearing caps are numbered and have arrows for proper positioning. The No. 1 cap is at the flywheel end. The arrows point toward the flywheel end of the engine.

4. Reinstall the main bearing caps **(Figure 6-138, (3))**.

5. Apply a light coat of clean engine oil to the bearing cap bolts and tighten the bolts to the specified torque in two stages (1/2 then full torque). *See Special Torque Chart on page 6-25 for specifications.*

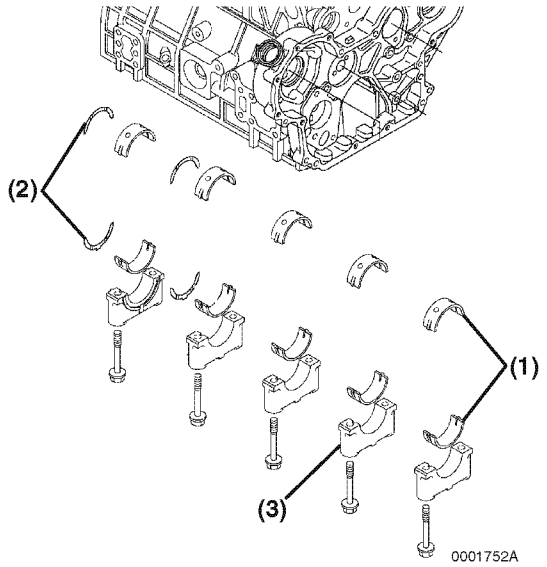

Figure 6-138

6. Rotate the crankshaft to assure it turns freely.
7. Apply ThreeBond Liquid Gasket No. 1212, Yanmar Part No. 977770-01212 to the mounting flange of the seal housing **(Figure 6-139, (2))**.
8. Align the seal housing with the two dowel pins.
9. Reinstall seal housing and seal assembly.
10. Reinstall the flywheel **(Figure 6-139, (1))** and tighten the bolts to the specified torque. *See Special Torque Chart on page 6-25 for specifications.*

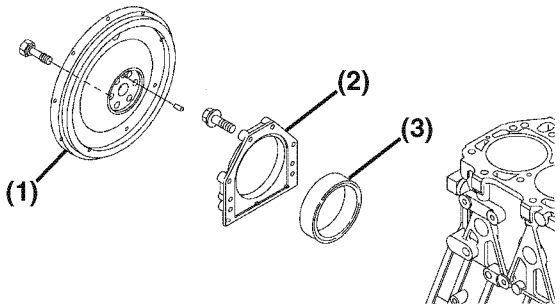

Figure 6-139

Installation of Pistons

IMPORTANT

Do not allow the connecting rod to contact the crankshaft journal during piston installation. Damage to the crankshaft bearing journal may result.

1. Lubricate the piston, piston rings, and cylinder with clean engine oil or assembly lubricant.
2. Rotate the crankshaft so the crankpin for the piston being installed is near bottom dead center.

IMPORTANT

*Ensure the piston ring gaps are located correctly **(Figure 6-140)**.*

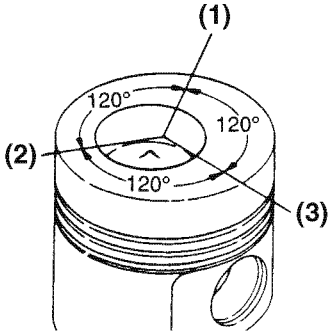

1 – Top Compression Ring End Gap
2 – Second Compression Ring End Gap
3 – Oil Ring End Gap

Figure 6-140

3. Using a piston ring compressor, compress the piston rings.

IMPORTANT

*The piston and connecting rod must be installed in the correct orientation. The orientation of the piston to the cylinder is **different** depending on engine model.*

Piston Orientation to Cylinder - By Model	
All TNV models - 82, 84(T), 88, 94, and 98(T)	Only TNV models - 106(T)

Orient the piston identification mark stamped on top of the piston on the fuel injection pump side of the engine	Orient the piston identification mark stamped on top of the piston on the camshaft side of the engine

Piston Installation - All TNV models - 82, 84(T), 88, 94, and 98(T)

When correctly assembled, the piston identification mark **(Figure 6-141, (2))** stamped into the top of the piston will be on the same side of the connecting rod as the match marks **(Figure 6-141, (4))** stamped into the connecting rod and connecting rod cap.

When installed in the cylinder, the piston identification mark **(Figure 6-141, (2))** stamped on the top of the piston must face the fuel injection pump side **(Figure 6-141, (1))** of the engine and the embossed mark on the connecting rod **(Figure 6-141, (3))** must face the flywheel end **(Figure 6-141, (5))** of the engine.

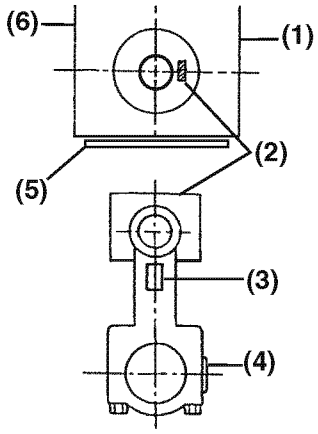

1 – Fuel Injection Pump Side of Engine
2 – Piston Identification Mark
3 – Embossed Mark on Connecting Rod
4 – Rod and Cap Match Marks
5 – Flywheel End of Engine
6 – Camshaft Side of Engine

Figure 6-141

Piston Installation - Only TNV models 106(T)

When correctly assembled, the identification mark **(Figure 6-142, (2))** stamped into the top of the piston will be on the opposite side of the connecting rod as the match marks **(Figure 6-142, (4))** stamped into the connecting rod and connecting rod cap.

When installed in the cylinder, the piston identification mark **(Figure 6-142, (2))** stamped on the top of the piston must face the camshaft side **(Figure 6-142, (6))** of the engine and the embossed mark on the connecting rod **(Figure 6-142, (3))** must face the flywheel end **(Figure 6-142, (5))** of the engine.

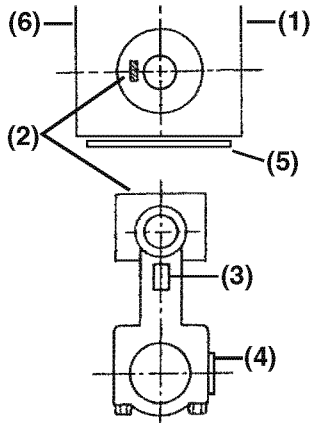

1 – Fuel Injection Pump Side of Engine
2 – Piston Identification Mark
3 – Embossed Mark on Connecting Rod
4 – Rod and Cap Match Marks
5 – Flywheel End of Engine
6 – Camshaft Side of Engine

Figure 6-142

4. Reinstall the bearing inserts **(Figure 6-143, (1))** in the connecting rod and cap.
5. Apply a liberal coat of clean engine oil to the bearing inserts and crankshaft journal.
6. Apply a light coat of clean engine oil to the rod cap bolts. Reinstall the connecting rod cap **(Figure 6-143, (2))**. Tighten the connecting rod bolts to the specified torque in two stages (1/2 then full torque). *See Special Torque Chart on page 6-25 for specifications.*

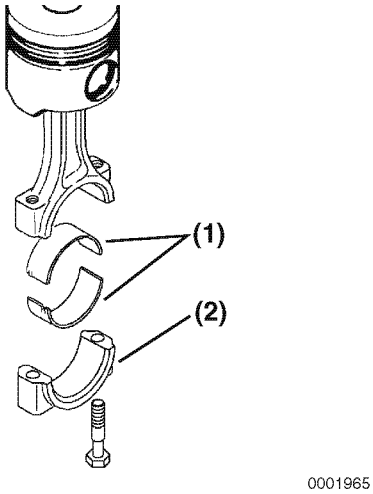

Figure 6-143

7. Reinstall the remaining pistons in their respective cylinders.

Reassembly of Camshaft and Timing Components

Installation of Gear Case or Front Plate

1. If removed, install a new camshaft bushing **(Figure 6-144, (3))** using the appropriate service tool.
2. Apply a continuous bead of ThreeBond Liquid Gasket No. 1212, Yanmar Part No. 977770-01212 to the mounting area of the gear case or front plate. Be sure to circle each bolt hole.
3. 4TNV94 - 4TNV106: Install two new O-rings **(Figure 6-144, (2))** in the cylinder block.

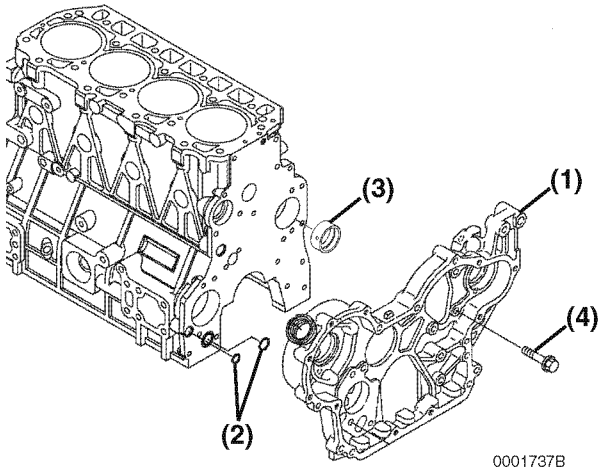

Figure 6-144

4. TNV84 - TNV88: Reinstall the dowels **(Figure 6-145, (5))** and a new O-ring **(Figure 6-145, (2))**.

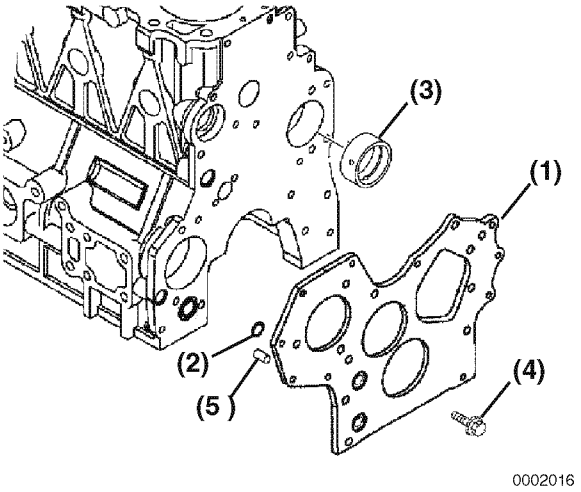

Figure 6-145

5. Reinstall the gear case **(Figure 6-144, (1))** or front plate **(Figure 6-145, (1))**. Tighten the bolts to the specified torque.

Installation of Camshaft

Note: The gear housing or front plate must be reinstalled prior to installing the camshaft. *See Installation of Gear Case or Front Plate on page 6-95.*

1. If removed, reinstall the camshaft end plate **(Figure 6-146, (1))**, key, and timing gear **(Figure 6-146, (4))** onto the camshaft using a press.

Note: Heat the gear to 356 - 392°F (180 - 200°C) and press onto the end of the camshaft.

2. Rotate the cylinder block so that gravity will keep the tappets **(Figure 6-146, (5))** in place and out of the way of the camshaft lobes when the camshaft is being reinstalled.

Note: If the engine is not installed on an engine repair fixture, stand the engine upright on the flywheel end mounting flange.

Note: The tappets are “mushroom” shaped and must be installed from inside the engine crankcase.

3. Lubricate the tappets with clean oil or assembly lube. Reinstall the tappets in their respective locations in the cylinder block. Push the tappets fully into the tappet bores so they will not interfere with the installation of the camshaft.
4. Lubricate the camshaft **(Figure 6-146, (2))** with clean engine oil or assembly lube. Slowly insert the camshaft through the front of the engine.
5. Reinstall and tighten the cap screws **(Figure 6-146, (3))**.

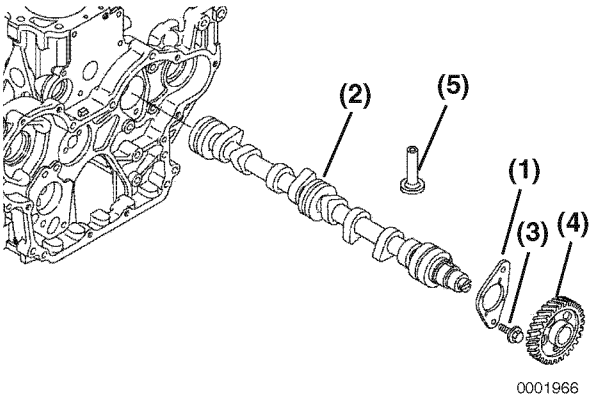

Figure 6-146

6. If removed, reinstall the fuel injection pump. Adjust the fuel injection timing the engine after installation. *See Adjusting Fuel Injection Timing on page 7-34.*

Installation of Timing Gears

1. Set the No. 1 piston to top dead center.
2. Rotate the camshaft until the mark **(Figure 6-147, (C))** is approximately at the 9 o'clock position.

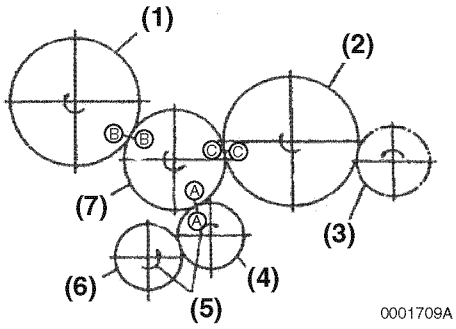

1 – Fuel Injection Pump Gear
2 – Camshaft Gear
3 – Optional Accessory Drive Gear
4 – Crankshaft Gear
5 – Direction of Rotation
6 – Oil Pump Gear
7 – Idler Gear

Figure 6-147

3. Lubricate the idler gear **(Figure 6-148, (2))**, bushing **(Figure 6-148, (3))** and idler gear shaft **(Figure 6-148, (1))** with clean engine oil.

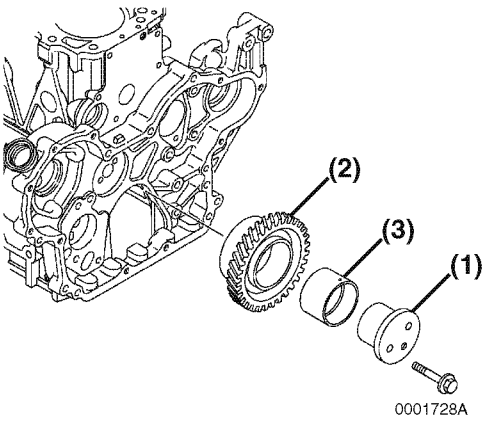

Figure 6-148

4. Align the timing gears as shown in **(Figure 6-147)**.
5. Reinstall the idler gear and idler gear shaft. Be sure the oil hole in the bushing is facing toward the top of the engine.
6. Ensure all three timing marks **(Figure 6-147, (A, B, C))** are aligned.
7. When all gears are properly aligned, tighten the idler gear retaining bolts to specified torque. *See Special Torque Chart on page 6-25 for specifications.*

Installation of Gear Case Cover

1. Apply a continuous bead of ThreeBond Liquid Gasket No. 1212, Yanmar Part No. 977770-01212 to the mounting area of the gear case cover **(Figure 6-149, (1))**. Be sure to circle the bolt holes.

IMPORTANT

3TNV84 - 4TNV88 engines: *Be sure to align the flats on the oil pump with the flats on the crankshaft gear when installing the gear case cover.*

2. Reinstall and tighten the gear case cover bolts.

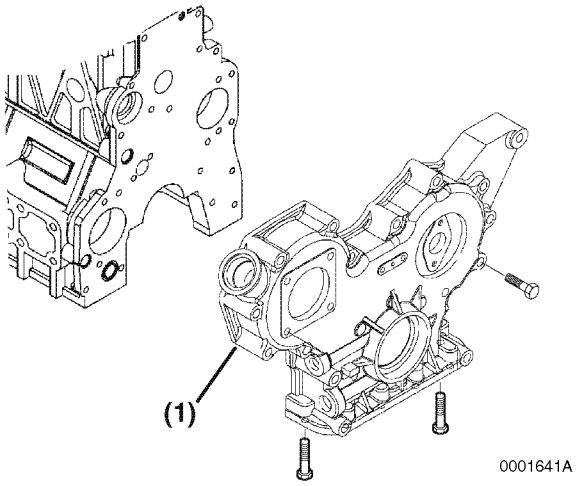

Figure 6-149

3. Reinstall the crankshaft pulley.

IMPORTANT

3TNV82A, 3TNV84, 3TNV84T, 3TNV88, 4TNV84, 4TNV84T, 4TNV88, 4TNV94L, 4TNV98, 4TNV98T: Use the crankshaft pulley installation tool ***(Figure 6-150, (3))*** *when reinstalling the pulley* ***(Figure 6-150, (1))****. The tool will guide the pulley hub and protect the front seal* ***(Figure 6-150, (2))*** *from damage.*

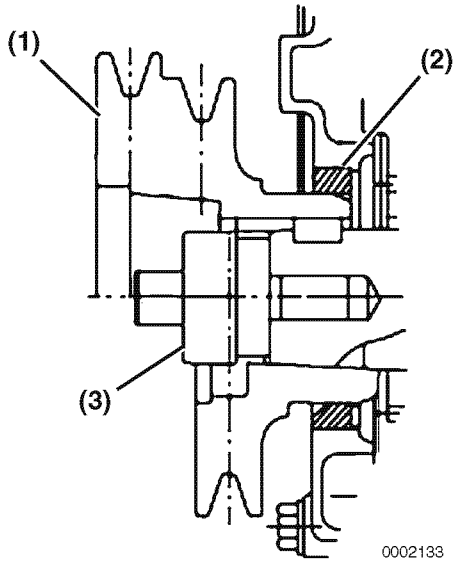

Figure 6-150

4. Reinstall the washer and bolt. Tighten the bolt to the specified torque. *See Special Torque Chart on page 6-25 for specifications.*

Installation of Oil Pan

1. Reinstall the oil pickup tube **(Figure 6-151, (1))** using a new O-ring **(Figure 6-151, (2)).**

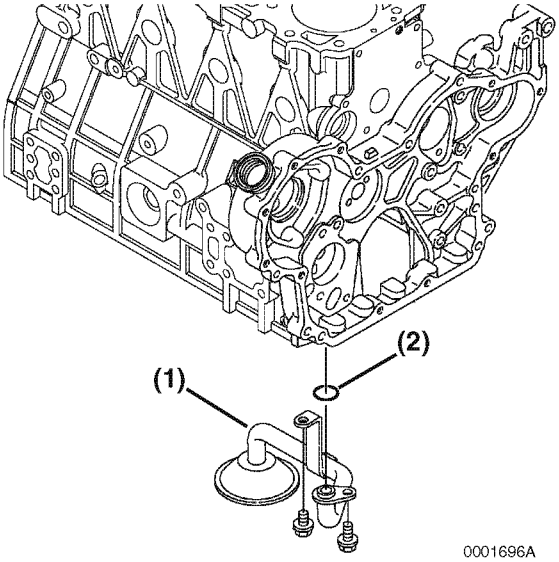

Figure 6-151

2. Apply a continuous bead of ThreeBond Liquid Gasket No. 1212, Yanmar Part No. 977770-01212 to the mounting surface of the oil pan **(Figure 6-152, (1))**. Be sure to circle each bolt hole.
3. Reinstall the oil pan and tighten the bolts securely.

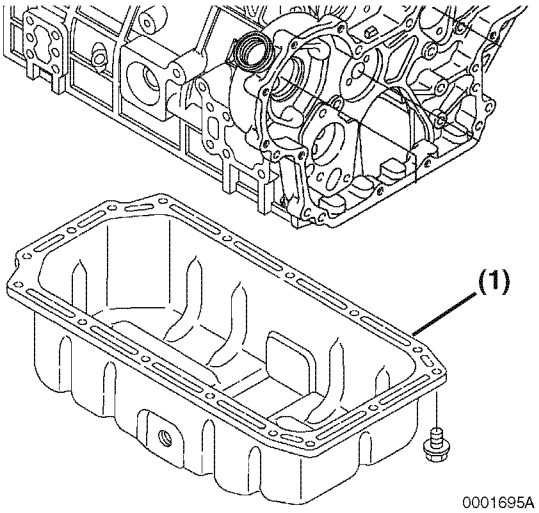

Figure 6-152

Final Reassembly of Engine

1. Reinstall the starter motor.
2. Reinstall the cylinder head. *See Reassembly of Cylinder Head on page 6-46 for the 2-valve cylinder head or 6-62 for the 4-valve cylinder head.*
3. Reinstall the engine in the machine.
4. Reconnect the fuel and coolant lines.
5. Reinstall the alternator.
6. Reconnect and adjust the throttle cable.
7. Reconnect all electrical connections.
8. Fill the engine with oil and coolant.
9. Reconnect the battery cables, negative (-) cable last.

EGR SYSTEM

EGR system

Applicable engines : 4TNV98-E, 4TNV98-Z

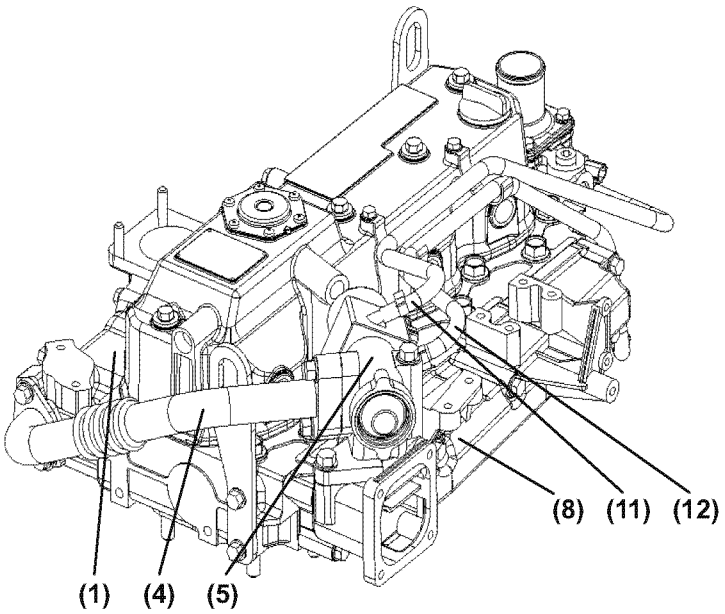

Figure 6-153

Applicable engines : 4TNV84T-Z, 4TNV98T-Z

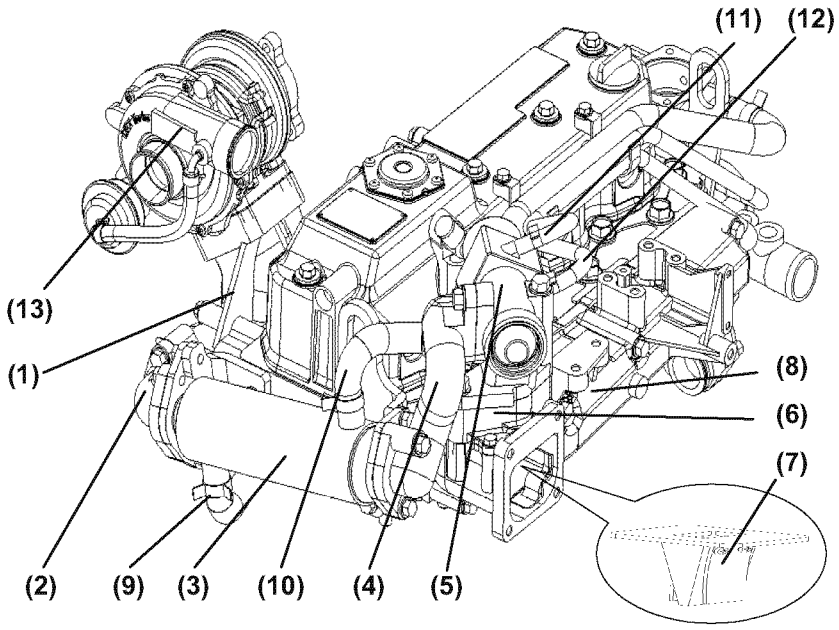

Figure 6-154

1 – Exhaust manifold
2 – Elbow, EGR cooler inlet
3 – EGR cooler
4 – EGR pipe
5 – EGR valve
6 – Spacer, EGR lead valve
7 – Lead valve, EGR
8 – Intake manifold
9 – Cooling water hose, EGR cooler inlet
10 – Cooling water hose, EGR cooler outlet
11 – Cooling water hose, EGR valve inlet
12 – Cooling water hose, EGR valve outlet
13 – Turbocharger

EGR system

DANGER

SCALD HAZARD!

- NEVER remove the radiator cap if the engine is hot. Steam and hot engine coolant will spurt out and seriously burn you. Allow the engine to cool down before you attempt to remove the radiator cap.
- Tighten the radiator cap securely after you check the radiator. Steam can spurt out during engine operation if the cap is loose.
- ALWAYS check the level of the engine coolant by observing the reserve tank.
- Failure to comply will result in death or serious injury.

0000002en

WARNING

BURN HAZARD!

- Keep your hands and other body parts away from hot engine surfaces such as the muffler, exhaust pipe, turbocharger (if equipped) and engine block during operation and shortly after you shut the engine down. These surfaces are extremely hot while the engine is operating and could seriously burn you.
- Failure to comply could result in death or serious injury.

0000015en

WARNING

ENTANGLEMENT HAZARD!

- Stop the engine before you begin to service it.
- NEVER leave the key in the key switch when you are servicing the engine. Someone may accidentally start the engine and not realize you are servicing it. This could result in a serious injury.
- If you must service the engine while it is operating, remove all jewelry, tie back long hair, and keep your hands, other body parts and clothing away from moving / rotating parts.
- Failure to comply could result in death or serious injury.

0000010en

WARNING

FUME / BURN HAZARD!

- Always read and follow safety related precautions found on containers of hazardous substances like parts cleaners, primers, sealants and sealant removers.
- Failure to comply could result in death or serious injury.

0000014en

CAUTION

CAUTION

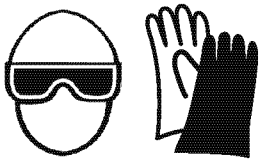

COOLANT HAZARD!

- Wear eye protection and rubber gloves when you handle long life or extended life engine coolant. If contact with the eyes or skin should occur, flush eyes and wash immediately with clean water.
- Failure to comply may result in minor or moderate injury.

0000005en

CAUTION

When it is necessary to replace an EGR valve, be sure to replace the entire EGR

Inspecting/cleaning EGR related components

EGR Valve

Each EGR valve has four built-in coils. The power to each of the four coil is either ON or OFF at any given time. Depending on which coil is ON and which coil is OFF, the step motor rotates to determine the valve lift. The power to each coil is turned ON/OFF by the E-ECU based on the engine speed and fuel injection rate. The resistances of these coils should be as specified below when measured between each pair of pins shown. If any of the actually measured values is beyond the standard range, replace the entire EGR valve assembly.

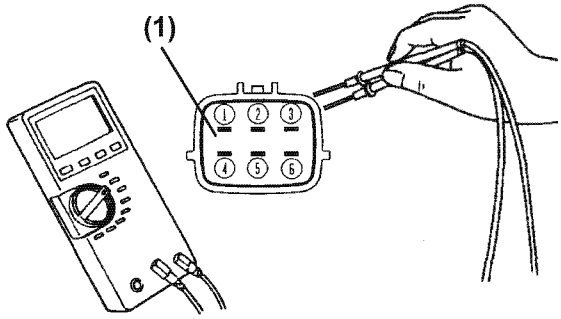

1 – EGR valve connectors

Figure 6-157

Standard value

Terminal	Resistance (Ω)
① - ②	15 ± 2 at 20 °C
② - ③	
④ - ⑤	
⑤ - ⑥	

Note: The higher the temperature, the higher the coil resistance. Therefore, wait for the EGR valve to return to normal state before measuring the resistances.

EGR valve operation checks

1. After removing each EGR valve from the engine, connect the valve with the connector.
2. Connect the valve to the battery's minus (-) terminal.
3. Turn on the key switch.(Note that turning on the key switch causes the E-ECU to check whether the valve functions properly by opening and shutting it.)
4. From the exhaust gas inlet, visually check whether the valve operates correctly.

Note: If the EGR valve fails to smoothly operate, replace the entire valve assembly with new one.

Note: If the EGR valve does not respond at all, check whether there exists a voltage (EGR valve signal) between the connector pins. If the voltage is within the standard range, then replace the entire valve assembly with new one.

IMPORTANT

Alternatively, you can remove the EGR pipe from the engine and check the valve operation through the gas inlet window, instead of removing the EGR valve from the engine.

Cleaning the EGR valves

⚠ WARNING

FUME / BURN HAZARD!

- **Always read and follow safety related precautions found on containers of hazardous substances like parts cleaners, primers, sealants and sealant removers.**
- **Failure to comply could result in death or serious injury.**

0000014en

⚠ CAUTION

FLYING OBJECT HAZARD!

- **ALWAYS wear eye protection when servicing the engine and when using compressed air or high-pressure water. Dust, flying debris, compressed air, pressurized water or steam may injure your eyes.**
- **Failure to comply may result in minor or moderate injury.**

0000003en

The EGR valves must be periodically cleaned every 1500 hours because, as exhaust gas circulates through them for a prolonged time, carbon is deposited on their inner surfaces, possibly deteriorating the EGR ratio.

To remove deposited carbon, use compressed air (0.19MPa(2kg/cm2) or lower). If the valves are heavily fouled, use carbon cleaner, kerosene, or some other liquid capable of removing carbon as well as a soft brush to clean the valves, taking care not to damage their parts.

When cleaning the valves, take extreme care to prevent water, solvent, cleaner, and other liquid from entering into the motor and coupler terminals; otherwise, failure may result.

CAUTION

NEVER use high-pressure water or compressed air at greater than 28 psi (193 kPa; 19 686 mmAq) or a wire brush to clean the radiator fins. Radiator fins damage easily.

0000016en

Lead valves

Similarly to the EVR valves, the lead valves must be periodically cleaned every 1500 hours because, as exhaust gas circulates through them for a prolonged time, carbon is deposited on their inner surfaces, possibly deteriorating the EGR ratio.

To remove carbon deposited inside the lead valves, disassemble and clean them.

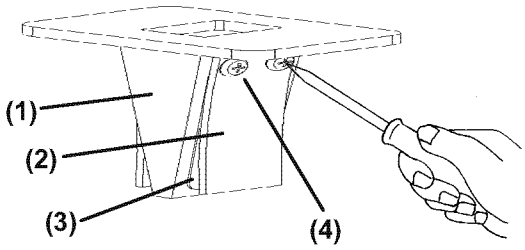

1 – Case
2 – Stopper
3 – Valve
4 – Machine screw

Figure 6-158

To remove deposited carbon, use carbon cleaner, kerosene, or some other liquid capable of removing carbon as well as a soft brush or cloth to clean the valves, taking care not to damage their parts.

Upon completion of carbon removal, wipe off water and liquid, make sure that the case, valve, and stopper are free of foreign matter, and then reinstall the valve and related parts.

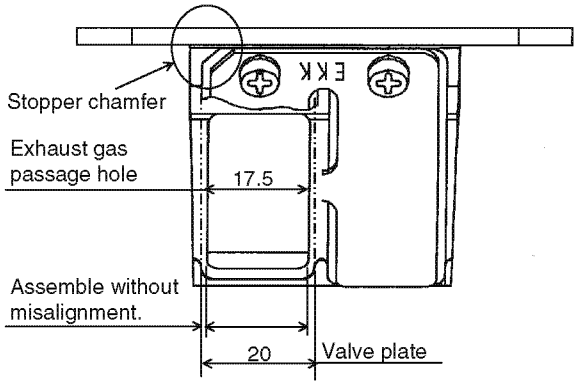

Figure 6-159

Precautions for installation

1. The valve and stopper must be installed in their specific orientations. As shown in the figure above, install the valve and stopper so that they are located on the left-hand side of the lead valve.
2. Install the valve by tightening the machine screw while ensuring that it is evenly positioned inside the case window.
3. The machine screw must be tightened with torque of 1.37±0.2N•m(14±2kgf•cm).
4. After tightening the machine screw, mark it with a marker to indicate that it has already been tightened.

EGR cooler

The EGR cooler must be periodically cleaned every 1500 hours because the exhaust gas passage is subject to carbon deposition and the cooling water transit portion to scale deposition and these depositions gradually deteriorate the cooling of recirculated gas, thus resulting in higher gas temperatures and lower effective circulation amounts (EGR ratio).

To remove deposited carbon from the gas passage, use compressed air (0.19MPa(2kg/cm2) or lower). Then dip the gas passage in carbon cleaner, kerosene, or some other liquid capable of removing carbon; leave it dry and blow it with compressed air again.

To clean the water transit portion, dip it in a solution of descaling detergent diluted with water and wash it.

EGR pipe and other connecting elbows

The exhaust gas passage is subject to carbon deposition when used over time. To remove deposited carbon from the gas passage, use compressed air (0.19MPa(2kg/cm^2) or lower). If the exhaust gas passage is heavily fouled, clean it by dipping it in carbon cleaner, kerosene, or some other liquid capable of removing carbon.

CAUTION

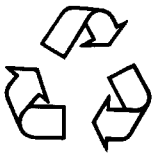

- **ALWAYS be environmentally responsible.**
- **Follow the guidelines of the EPA or other governmental agencies for the proper disposal of hazardous materials such as engine oil, diesel fuel and engine coolant. Consult the local authorities or reclamation facility.**
- **NEVER dispose of hazardous materials irresponsibly by dumping them into a sewer, on the ground, or into ground water or waterways.**
- **Failure to follow these procedures may seriously harm the environment.**

0000013en

Installing EGR related components/parts

To install these components/parts, reverse the disassembly procedure described above: thus install the lead valve, spacer, EGR valve, EGR pipe, EGR cooler, elbow, cooler cooling water hose, and EGR cooling water hose exactly in this order.

The EGR system uses steel gaskets at the joints between its components/parts. When you remove the system's components/parts and reinstall them, replace the steel gaskets between them with new correct ones.

Section 7

FUEL SYSTEM

Page

Before You Begin Servicing 7-3

Introduction 7-8
- Fuel Injection Pump 7-8
- Stop Solenoid 7-9
- Cold Start Device 7-9
- Trochoid Fuel Pump 7-10
- Electronically controlled governor 7-10

Fuel System Specifications 7-11
- Special Torque Chart 7-11
- Test and Adjustment Specifications 7-12

Special Service Tools 7-13

Measuring Instruments 7-13

Fuel System Diagram 7-14

Fuel System Components 7-15
- 2-Valve Cylinder Head 7-15
- 4-Valve Cylinder Head 7-17

Fuel Injection Pump 7-19
- Removal of Fuel Injection Pump 7-19
- Installation of Fuel Injection Pump 7-24

Checking and Adjusting Fuel Injection Timing 7-30
- Determining the Fuel Injection Timing Specification 7-30
- Checking Fuel Injection Timing 7-31
- Adjusting Fuel Injection Timing 7-34

Fuel Injectors 7-35
Removal of Fuel Injectors 7-35
Testing of Fuel Injectors 7-38
Disassembly and Inspection of Fuel Injectors 7-39
Adjusting Fuel Injector Pressure 7-41
Reassembly of Fuel Injectors 7-41
Installation of the Fuel Injectors 7-42

BEFORE YOU BEGIN SERVICING

⚠ WARNING

ENTANGLEMENT HAZARD!

- Stop the engine before you begin to service it.
- NEVER leave the key in the key switch when you are servicing the engine. Someone may accidentally start the engine and not realize you are servicing it. This could result in a serious injury.
- If you must service the engine while it is operating, remove all jewelry, tie back long hair, and keep your hands, other body parts and clothing away from moving / rotating parts.
- Failure to comply could result in death or serious injury.

0000010en

⚠ WARNING

SUDDEN MOVEMENT HAZARD!

- Engaging the transmission or PTO at an elevated engine speed could result in unexpected movement of the equipment.
- Failure to comply could result in death or serious injury.

0000006en

⚠ WARNING

- Never inject fuel toward you. Since the fuel is injected at high pressure from the nozzle, it may penetrate the skin, resulting in injury.
- Never inject fuel toward a fire source. Atomized fuel is highly flammable and may cause a fire or burn skin.

0000028en

⚠ WARNING

FUME / BURN HAZARD!

- Always read and follow safety related precautions found on containers of hazardous substances like parts cleaners, primers, sealants and sealant removers.
- Failure to comply could result in death or serious injury.

0000014en

⚠ WARNING

- Never use the E-ECU for other purposes than intended or in other ways than specified by Yanmar. Doing so could result in the violation of emission control regulations and will void the product warranty.
- Improper use or misuse of the E-ECU may result in death or serious injury due to an abrupt and unexpected increase in engine speed.

9999999en

⚠ WARNING

- Be sure to use the E-ECU in conjunction with the engines whose models or serial numbers are specified by Yanmar.
  Other E-ECU/engine combinations than specified will void the engine warranty.
- Improper use or misuse of the E-ECU may result in death or serious injury due to an abrupt and unexpected increase in engine speed.

9999998en

⚠ WARNING

- Replacing the fuel injection pump involves rewriting the fuel injection data in the E-ECU.
  Be sure to contact your local Yanmar dealer before replacing the fuel injection pump.
  Failure to rewrite the fuel injection data before replacing the fuel injection pump will void the engine warranty.
- Improper use or misuse of the E-ECU may result in death or serious injury due to an abrupt and unexpected increase in engine speed.

9999997en

⚠ WARNING

- Replacing the E-ECU involves migrating the fuel injection data to the existing E-ECU to the new unit.
  Be sure to contact your local Yanmar dealer before replacing the E-ECU.
  Failure to migrate the fuel injection data before replacing the E-ECU will void the engine warranty.
- Improper use or misuse of the E-ECU may result in death or serious injury due to an abrupt and unexpected increase in engine speed.

9999996en

⚠ CAUTION

FLYING OBJECT HAZARD!

- ALWAYS wear eye protection when servicing the engine and when using compressed air or high-pressure water. Dust, flying debris, compressed air, pressurized water or steam may injure your eyes.
- Failure to comply may result in minor or moderate injury.

0000003en

⚠ CAUTION

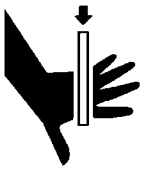

PINCH HAZARD!

Carefully rotate the alternator toward the cylinder block while loosening the V-belt. Failure to comply may result in minor or moderate injury.

0000014en

CAUTION

- NEVER remove or attempt to remove the tamper-proof devices from the full-load fuel adjusting screw or the high-speed throttle limit screw on the fuel injection pump and governor assembly. These adjustments have been made at the factory to meet all applicable emissions regulations and then sealed.
- NEVER attempt to make any adjustments to these sealed adjustment screws. If adjustments are required, they can be made only by a qualified fuel injection shop that will ensure the injection pump continues to meet all applicable emissions regulations and then replace the tamper-proof seals.
- Tampering with or removing these devices may void the "Yanmar Limited Warranty."

0000146en

CAUTION

Never use a steel wire brush to clean fuel injectors. Damage to the nozzle and other components is likely to result.

0000172en

CAUTION

Allow the engine to warm-up for at least five minutes and the idle speed of the engine to return to normal before engaging the transmission or any PTOs. Engaging the transmission or PTO at an elevated engine speed could result in an unexpected movement of the equipment.

0000159en

CAUTION

Remove or install the high-pressure fuel injection lines as an assembly whenever possible. Disassembling the high-pressure fuel injection lines from the retainers or bending any of the fuel lines will make it difficult to reinstall the fuel lines.

0000047en

CAUTION

After marking the position of the pump drive gear, do not rotate the engine crankshaft. Rotating the crankshaft will cause the fuel injection pump to become misaligned.

0000048en

CAUTION

Do not loosen or remove the four bolts retaining the fuel injection pump drive gear to the fuel injection pump hub. Do not disassemble the fuel injection pump drive gear from the hub. Correct fuel injection timing will be very difficult or impossible to achieve.

0000031en

CAUTION

Do not rotate the crankshaft with the injection pump removed.

0000083en

CAUTION

Each pressure adjusting shim removed or added changes the pressure threshold by approximately 275 psi (1.9 MPa, 19 kgf/cm^2). Adding adjusting shims increases the threshold pressure. Removing adjusting shims reduces the pressure threshold.

0000081en

CAUTION

Shut down the engine if the fault indicator comes on.

Continuing running the engine with the fault indicator being on may result in a serious malfunction of or damage to the engine, and will void the engine warranty.

9999999en

CAUTION

Do not energize the starter for a period of longer than 15 seconds.

Take a pause of at least 30 seconds between energization of the starter.

Otherwise the starter could suffer damage.

9999998en

CAUTION

- **High-pressure washing not recommended.**
- **Avoid using high-pressure washing for electronic or electric devices installed in, on or around the engine, including the E-ECU, relays and harness couplers.**

Otherwise such devices may suffer malfunction due to water ingress into them.

9999997en

CAUTION

- Do not plug or unplug the E-ECU for a period of at least 6 seconds after power to the unit has been turned on or off.
- Do not touch connector pins of the E-ECU with bare hands.
  Doing so may result in corrosion of the connector pins and/or damage to the internal circuits of the E-ECU due to static electricity.
- Do not force a measuring probe into the female coupler.
  Doing so may cause contact failure of the connector pins, resulting in malfunction of the E-ECU.
- Take care to prevent water from entering the couplers when plugging or unplugging the connector.
  Water inside the couplers may cause corrosion, resulting in malfunction of the E-ECU.
- Avoid plugging/unplugging the connector more than approx. 10 times.
  Frequent plugging/unplugging of the connector may cause contact failure of the connector pins, resulting in malfunction of the E-ECU.
- Do not use the E-ECU that has ever suffered drop impact.

9999996en

CAUTION

Always check the battery for proper charge.

Otherwise the electronically controlled engines may fail to start.

9999995en

INTRODUCTION

This section of the *Service Manual* describes the procedures necessary to remove, install, and time the MP fuel injection pump and its associated system components. This fuel injection pump is representative of the fuel injection pumps used on other TNV DI model engines. The descriptions given in this section basically apply also to fuel injection pumps used for electronically controlled engines unless otherwise described herein.

Fuel Injection Pump

Note: If the MP fuel injection pump itself requires servicing, it must be taken to an authorized Yanmar FIE (Fuel Injection Equipment) repair facility.

CAUTION

- **NEVER remove or attempt to remove the tamper-proof devices from the full-load fuel adjusting screw or the high-speed throttle limit screw on the fuel injection pump and governor assembly. These adjustments have been made at the factory to meet all applicable emissions regulations and then sealed.**
- **NEVER attempt to make any adjustments to these sealed adjustment screws. If adjustments are required, they can be made only by a qualified fuel injection shop that will ensure the injection pump continues to meet all applicable emissions regulations and then replace the tamper-proof seals.**
- **Tampering with or removing these devices may void the "Yanmar Limited Warranty."**

0000146en

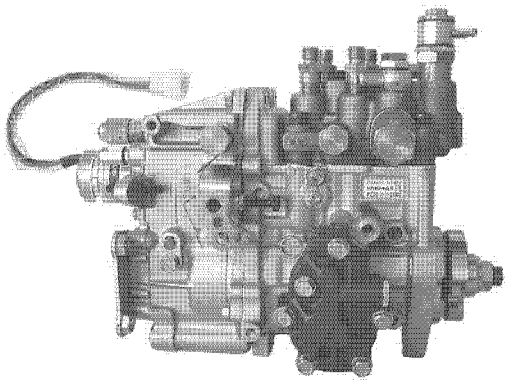

0000038

Figure 7-1

The following describes the features of the MP fuel injection pump, manufactured by Yanmar.

The fuel injection pump is a very important component of the engine. It is capable of making very precise fuel delivery adjustments according to the varied loads applied to the engine.

All of the fuel injection pump components are very precisely machined. It is extremely important to follow good service practices and maintain cleanliness when servicing the fuel injection pump.

The Yanmar MP "Mono-Plunger" Fuel Injection Pump is a distributor type pump which consists of a single fuel supply plunger, a distributor shaft, a hydraulic head and a pump housing. The hydraulic head has a delivery valve for each cylinder. The fuel injection pump housing contains a governor and an internal camshaft.

The fuel is pressurized by the up and down motion of the camshaft-driven single plunger. It is then distributed to the proper fuel injector by the rotating distributor shaft.

There are two versions and sizes of the MP Fuel Injection Pump. The smaller of the two pumps, the MP2 pump, is used on the 3TNV82A - 4TNV88 model engines. The larger pump, the MP4 pump, which has a larger single plunger and a more aggressive cam profile, is used on the 4TNV94L - 4TNV106T model engines.

Stop Solenoid

The MP fuel injection pumps are equipped with a stop solenoid that controls the fuel flow inside the fuel injection pump.

With the starter switch in the OFF position, no current flows to the stop solenoid and the solenoid plunger is extended holding the fuel injection pump fuel rack in the “closed” position and not allowing fuel to flow through the injection pump and to the engine.

When the starter switch is turned to the start position, the “pull coil” (36.5 Amp draw / white wire) inside the solenoid is activated and pulls the solenoid plunger into the solenoid. This releases the fuel injection pump fuel rack, allowing fuel to flow through the injection pump and allowing the engine to start and run.

When the starter switch is returned to the ON or RUN position, the “pull coil” no longer receives current and the “hold coil” (0.5 Amp draw / red wire) inside the solenoid is activated. The “hold coil” holds the solenoid plunger in the RUN position, allowing fuel to continue flowing and he engine to continue running.

To stop the engine, the key switch is turned to the OFF position. Current no longer flows to the stop solenoid “hold coil”, and the solenoid plunger extends and moves the injection pump fuel rack to the “closed” position, shutting off the fuel flow and stopping the engine.

Failure of the stop solenoid could result in the engine not starting, the engine stopping suddenly, the engine not continuing to run with the key switch returned to the ON or RUN position, or the engine failing to stop when the key switch is turned to the OFF position. Use a multimeter or continuity light to check for 12V at the stop solenoid connector in the correct sequence.

Electronically controlled engines 4TNV84T-Z, 4TNV98-Z, 4TNV98-E, and 4TNV98T-Z are designed so that, when the key is turned on or off, the corresponding signal is sent to the E-ECU. Thus the E-ECU controls the rack actuator to provide a sufficient injection rate when the engine is started up (the key is turned on) or cut the fuel supply and stop then engine when the key is turned off. Therefore, these electronically controlled engines does not have a stop solenoid.

Cold Start Device

The Yanmar TNV model engines are equipped with a cold start device (CSD).

The cold start device is located in the upper section of the fuel injection pump and is connected to the engine’s cooling system.

- The cold start device improves engine starting at lower temperatures. At engine cooling system temperatures below 41°F (5°C), the cold start device advances the fuel injection timing and slightly increases the fuel injection volume.
- For approximately the first 5 minutes of operation, the idle speed of the engine will be slightly elevated.

CAUTION

Allow the engine to warm-up for at least five minutes and the idle speed of the engine to return to normal before engaging the transmission or any PTOs. Engaging the transmission or PTO at an elevated engine speed could result in an unexpected movement of the equipment.

0000159en

- When the cold start device is activated, you may notice a slight increase in the exhaust smoke of the engine during engine warm-up. Electronically controlled engines 3TNV84T-Z, 4TNV84T-Z, 4TNV98-Z, 4TNV98-E, and 4TNV98T-Z use a cold start device (CSD) that consists of a fuel injection pump complete with a solenoid valve **(Figure 7-2, (1))**.

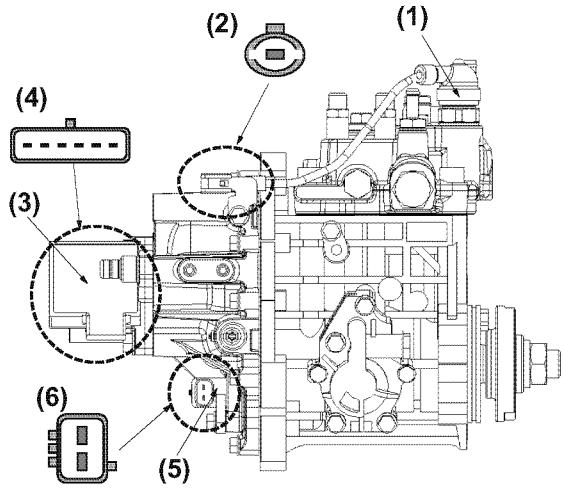

Figure 7-2

- When the engine is started with the cooling water sensor detecting a low water temperature of 10Åé or lower and the E-ECU receives the corresponding signal, then the E-ECU causes the CSD's solenoid valve to increase the injection rate and advance the injection timing.
- Because of this, the engine speed increases by approximately 75 min-1 while the CSD is operating. When the water temperature becomes 10°C or higher, the CSD is turned off and the engine returns to the normal speed.

Trochoid Fuel Pump

Note: The trochoid fuel pump located on the side of the MP fuel injection pump is not a “fuel supply” pump. The function of this pump is to raise the pressure of the fuel supplied by the electric fuel supply pump to the internal fuel pressure required by the MP fuel injection pump.

The use of an electric fuel supply pump is required on all TNV model engines with the MP fuel injection pump.

Electronically controlled governor

Electronically controlled engines 4TNV84T-Z, 4TNV98-Z, 4TNV98-E, and 4TNV98T-Z are quipped with an electronically controlled governor called "Eco Governor". Combined with the rack actuator **(Figure 7-2, (3))**, engine speed sensor **(Figure 7-2, (5))**, and other parts, the electronically controlled governor communicates with the engine controller (E-ECU), whereby the engine speed and fuel injection rate are controlled.

FUEL SYSTEM SPECIFICATIONS

Special Torque Chart

Component		Tightening Torque	Lubricating Oil Application (Thread Portion and Seat Surface)
Fuel Injector Retainer Bolt		29 ft·lb (39.2 N·m; 4 kgf·m)	Not Applied
Fuel Pump Drive Gear Nut	3TNV82A to 4TNV88	58 - 65 ft·lb (78 - 88 N·m; 8 - 9 kgf·m)	Not Applied
	4TNV94 to 4TNV106T	83 - 91 ft·lb (113 - 123 N·m; 11.5 - 12.5 kgf·m)	Not Applied
High-Pressure Fuel Injection Line Nuts		22 - 25 ft·lb (29 - 34 N·m; 3.0 - 3.5 kgf·m)	Not Applied
Fuel Return Line Bolts		69 - 87 in·lb (7.8 - 9.8 N·m; 0.8 - 1.0 kgf·m)	Not Applied
Fuel Injection Pump Mounting Nuts		17 - 21 ft·lb (23 - 28 N·m; 2.3 - 2.9 kgf·m)	Not Applied
Fuel Injector Nozzle Case Nut		30 - 33 ft·lb (39.2 - 44.1 N·m; 4 - 4.5 kgf·m)	Not Applied
Fuel Injection Pump Plunger Plug	3TNV82A to 4TNV88	22 - 26 ft·lb (30 - 35 N·m; 3.1 - 3.6 kgf·m)	Not Applied
	4TNV94 to 4TNV106T	30 - 33 ft·lb (40 - 45 N·m; 4.1 - 4.6 kgf·m)	Not Applied

Test and Adjustment Specifications

Model	Engine Class	Injector ID mark*	Fuel Injector Pressure	Fuel Injection Timing
3TNV82A - 4TNV88	CL	W	2843 - 2988 psi (19.6 - 20.6 MPa; 200 - 210 kgf/cm²)	*See Checking and Adjusting Fuel Injection Timing on page 7-30*
3TNV82A - 4TNV88 3TNV84T - 4TNV84T	VM	W**	2843 - 2988 psi (19.6 - 20.6 MPa; 200 - 210 kgf/cm²)	
		or	or	
		V**	3133 - 3278 psi (21.6 - 22.6 MPa; 220 - 230 kgf/cm²)	
4TNV94L - 4TNV106 4TNV98T - 4TNV106T	CL VM	V	3133 - 3278 psi (21.6 - 22.6 MPa; 220 - 230 kgf/cm²)	

Note: Fuel injection pressure of a new fuel injector is reduced approximately 72.5 psi (0.5 MPa; 5.0 kgf/cm²) after about 5 hours of operation due to the initial break in of the engine. When adjusting a new fuel injector or after it has been disassembled for service, adjust the fuel injector 72.5 psi (0.5 MPa; 5.0 kgf/cm²) higher than the above standard.

Note: All fuel injectors have a three character identification mark **(Figure 7-3, (1))**. The first character starts with “V” or “W”.

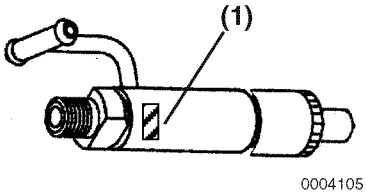

Figure 7-3

** Fuel injector identification is critical as each engine has a unique fuel injection pressure. The fuel nozzle is specifically matched to the fuel injector by engine model and / or engine speed.

SPECIAL SERVICE TOOLS

No.	Tool Name		Application	Illustration
1	Torque Wrench	Locally Available	For tightening nuts and bolts to the specified torque	0000840
2	Fuel Injector Removal Tool	Yanmar Part No. 129470-92305	Used in conjunction with a slide hammer to remove the fuel injectors (2-valve cylinder heads)	

MEASURING INSTRUMENTS

No.	Instrument Name		Application	Illustration
1	Fuel Injector Tester	Locally Available	For observing injection spray pattern of fuel injection nozzle and measuring injection pressure	
2	Dial Indicator*	Mituotoyo 2050SB - Locally Available	Check and adjust fuel injection timing	0000831
	Extension Rod*	Mituotoyo 303613 - Locally Available		
3	Fuel Injection Pump Plunger Adapter*	(M14) TNV82-88 - Yanmar Part No. 158090-51831 (M16) TNV94-106 - Yanmar Part No. 158090-51841	Mount dial indicator to fuel injection pump	0002690
4	Plunger Adapter Clamp	Yanmar Part No. 23000-013000	Clamps stem of dial indicator in plunger adapter.	0002691

* *These special service tools may also be available as an "MP Fuel Injection Pump Special Tool Set", under a different part number, in territories serviced by Yanmar America and Yanmar Europe. Contact your authorized Yanmar dealer or distributor for details.*

FUEL SYSTEM DIAGRAM

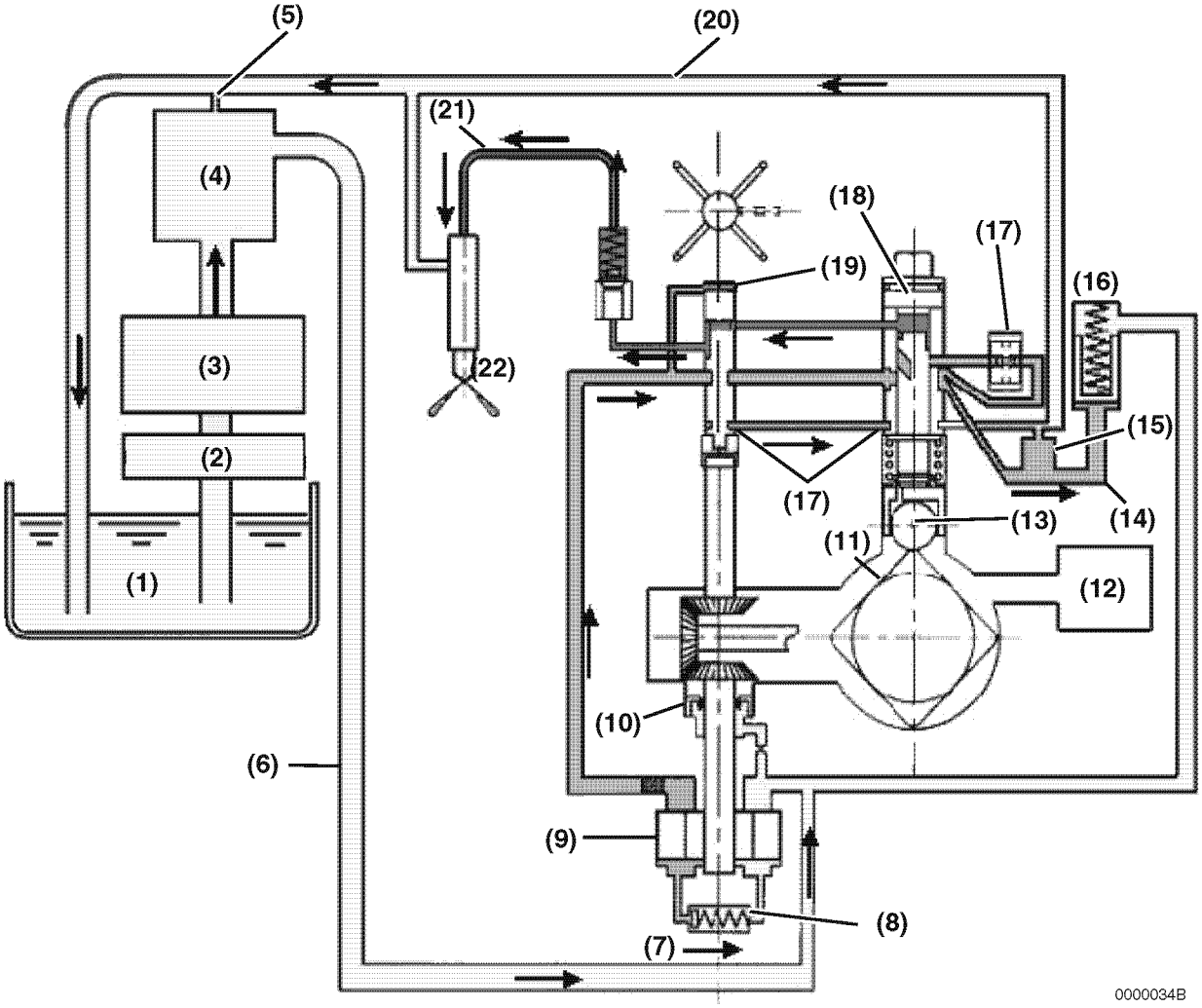

1 – Diesel Fuel Tank
2 – Fuel Filter / Water Separator
3 – Electric Fuel Pump
4 – Fuel Filter
5 – Air Bleed Orifice
6 – Fuel Supply Line
7 – Low Pressure Gallery
8 – Pressure Control Valve
9 – Trochoid Pump
10 – Oil Seal
11 – Fuel Injection Pump Cam
12 – Engine Crankcase
13 – Tappet
14 – High Pressure Gallery
15 – Overflow Orifice
16 – Accumulator
17 – Timer Piston
18 – Mono-Plunger
19 – Distributor Shaft
20 – Fuel Return Line
21 – High-Pressure Fuel Injection Lines
22 – Fuel Injector

Figure 7-4

FUEL SYSTEM COMPONENTS

2-Valve Cylinder Head

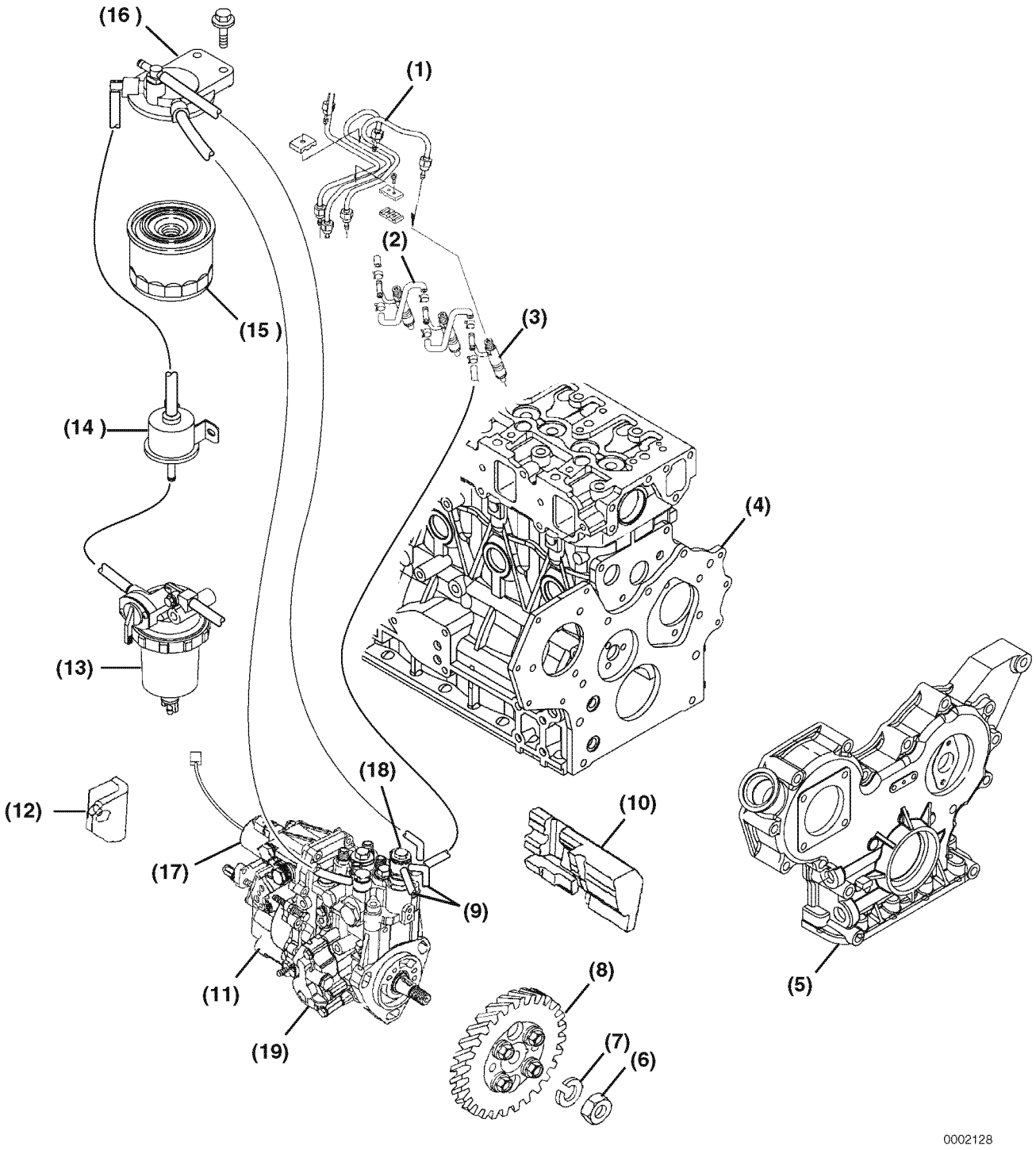

Figure 7-5

1 – High-Pressure Fuel Injection Lines
2 – Fuel Return Line
3 – Fuel Injector
4 – Front Plate or Timing Gear Case
5 – Gear Case Cover
6 – Fuel Injection Pump Drive Gear Nut
7 – Lock Washer
8 – Fuel Injection Pump Drive Gear Assembly (DO NOT remove or loosen the four bolts that fasten the injection pump drive gear to the injection pump drive gear hub!)
9 – Coolant Lines for Cold Start Device
10 – Fuel Injection Pump Insulator
11 – Fuel Injection Pump
12 – Rear Fuel Injection Pump Support
13 – Fuel Filter / Water Separator
14 – Electric Fuel Supply Pump
15 – Fuel Filter
16 – Fuel Filter Housing
17 – Stop Solenoid
18 – Cold Start Device (CSD)
19 – Trochoid Fuel Pump

4-Valve Cylinder Head

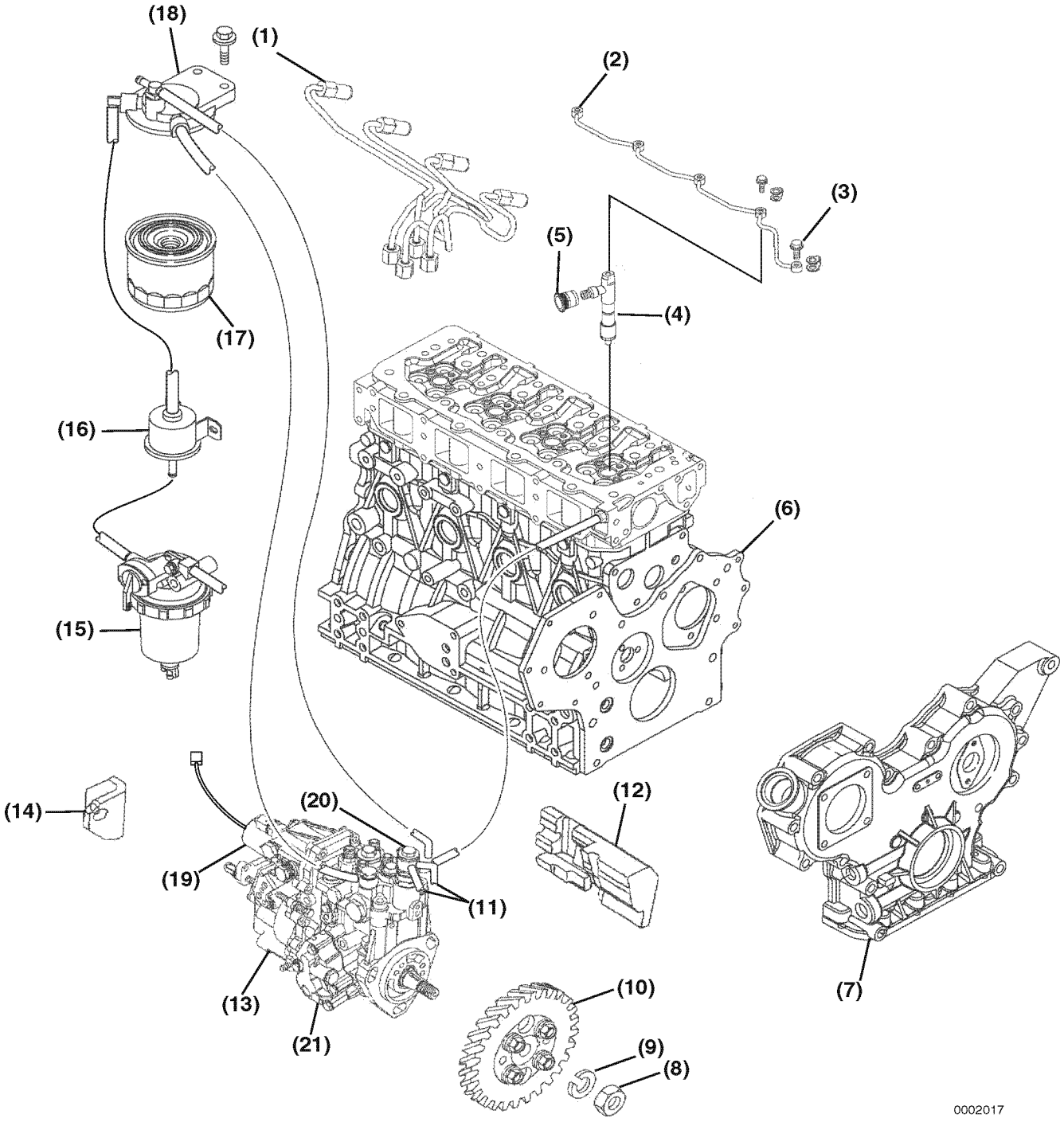

Figure 7-6

1 – High-Pressure Fuel Injection Lines
2 – Fuel Return Line
3 – Return Line-to-Cylinder Head Bolt
4 – Fuel Injector
5 – Injection Line Grommet
6 – Front Plate or Timing Gear Case
7 – Gear Case Cover
8 – Fuel Injection Pump Drive Gear Nut
9 – Lock Washer
10 – Fuel Injection Pump Drive Gear Assembly (DO NOT remove or loosen the four bolts that fasten the injection pump drive gear to the injection pump drive gear hub!)
11 – Coolant Lines for Cold Start Device *
12 – Fuel Injection Pump Insulator
13 – Diesel Fuel Injection Pump
14 – Rear Fuel Injection Pump Support
15 – Fuel Filter / Water Separator
16 – Electric Fuel Supply Pump
17 – Fuel Filter
18 – Fuel Filter Housing
19 – Stop Solenoid *
20 – Cold Start Device (CSD) **
21 – Trochoid Fuel Pump

*: Not used for electronically controlled engines.

**: Electronically controlled engines are equipped with a solenoid valve. As shown in the following figure, electronically controlled engines use an electronically controlled governor combined with a solenoid valve (CSD), rack actuator, engine speed sensor, and other parts.

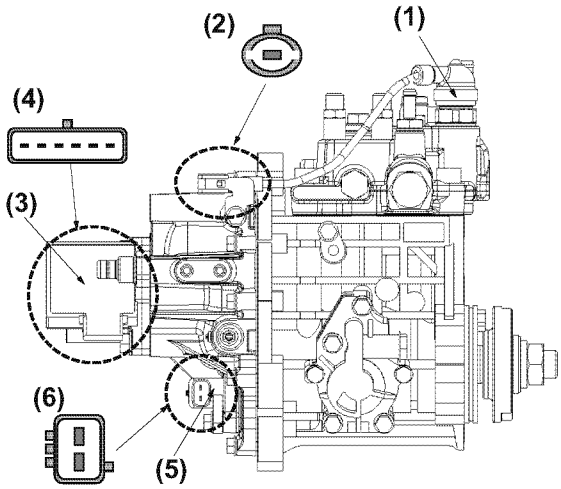

Figure 7-7

FUEL INJECTION PUMP

Removal of Fuel Injection Pump

1. Loosen the cooling fan V-belt.
2. Remove the engine coolant fan guard (if equipped), engine coolant fan **(Figure 7-8, (2))**, spacer **(Figure 7-8, (3))** if equipped, V-pulley **(Figure 7-8, (4))** and cooling fan V-belt **(Figure 7-8, (1))**.

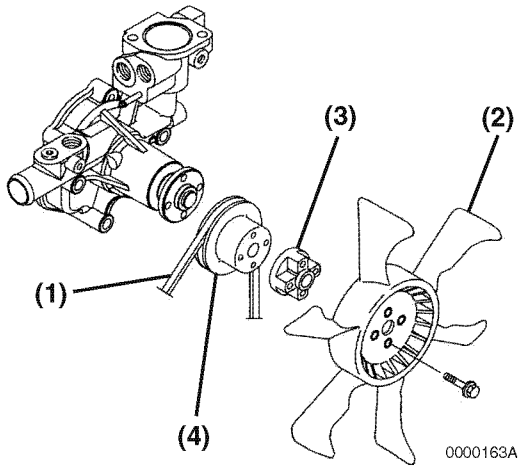

Figure 7-8

3. Close any fuel valves in the fuel supply line.
4. Place a drain pan under the fuel injection pump to catch any spillage.
5. Remove the high-pressure fuel injection lines as an assembly **(Figure 7-9, (1))**.

Note: To prevent "rounding" the fuel line nuts always use a "line" or "flare nut" wrench. When loosening the fuel line nuts, always hold the fuel injection pump delivery valves with a "back up" wrench to prevent loosening of the delivery valves.

6. First loosen the fuel line nuts at the fuel injectors and then at the fuel injection pump.

CAUTION

Remove or install the high-pressure fuel injection lines as an assembly whenever possible. Disassembling the high-pressure fuel injection lines from the retainers or bending any of the fuel lines will make it difficult to reinstall the fuel lines.

0000047en

7. Finish loosening all the fuel line nuts and remove the high-pressure fuel lines as an assembly being careful not to bend any of the fuel lines. Be sure to protect the fuel system from contamination by covering all open connections.
8. Disconnect the coolant lines from the cold start device **(Figure 7-9, (3))** on the fuel injection pump. Plug the open ends of the lines to minimize leakage and prevent contamination. This cooling water pipe is not used in electronically controlled engines 4ÇsNV84T-Z, 4TNV98-Z, 4TNV98-Z, and 4TNV98T-Z.
9. Disconnect the fuel return lines from the fuel return fitting **(Figure 7-9, (2)).** Plug the open ends of the lines to minimize leakage and prevent contamination.

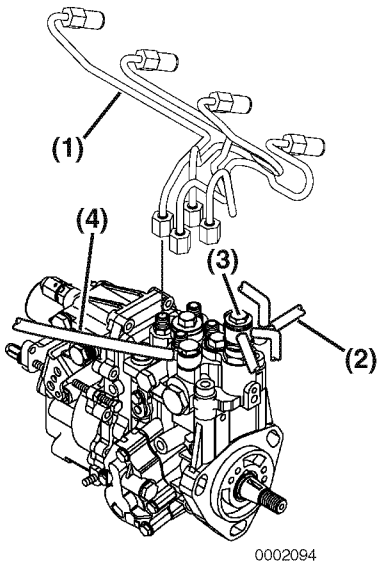

Figure 7-9

10. Remove the fuel supply line **(Figure 7-9, (4))**. Plug the open end of the line to minimize leakage and prevent contamination.

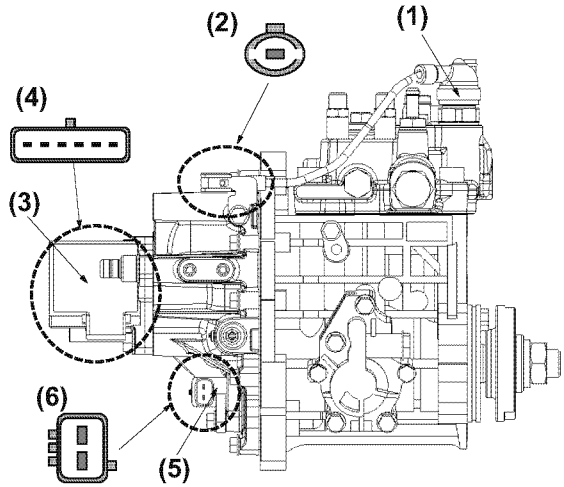

Figure 7-10

11. Remove the throttle cable from the fuel injection pump.
12. Separate the stop solenoid wiring connector **(Figure 7-11, (2))**.
    For electronically controlled engines 4TNV84T-Z, 4TNV98-Z, 4TNV98-E, and 4TNV98T-Z, remove the solenoid valve connector **(Figure 7-10, (2))**, rack actuator connector **(Figure 7-10, (4))**, and engine speed sensor connector **(Figure 7-10, (6))**.
13. Remove the rear fuel injection pump bracket(s) **(Figure 7-11, (1))** from the fuel injection pump.

Note: Configuration of the fuel injection pump rear brackets may vary depending upon engine model.

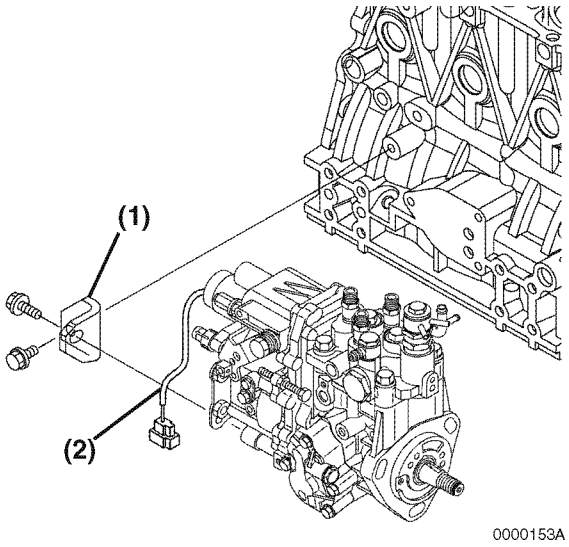

Figure 7-11

14. Disconnect the lube oil line **(Figure 7-12, (1))** and the clamp **(Figure 7-12, (2))** from the pump.

IMPORTANT

Take care to not damage or bend the oil line. In some applications, it may be preferable to remove the complete oil line assembly from the engine before proceeding.

Note: On models 3TNV82-4TNV88, the fuel injection pump drive gear cover is retained to the gear case cover by 4 bolts. On models 4TNV94-4TNV106, the cover is larger and retained by 7 bolts.

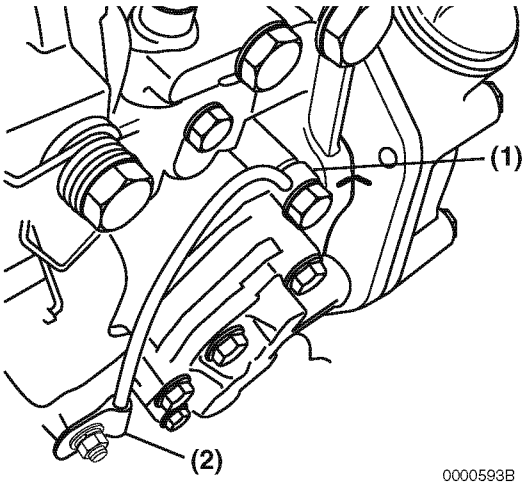

Figure 7-12

15. Remove the fuel injection pump drive gear cover **(Figure 7-13, (1))** from the gear case cover **(Figure 7-13, (2))**.

Note: The fuel injection pump drive gear cover is secured with an adhesive sealant. Use a gasket scraper to separate the fuel injection pump cover from the gear case cover.

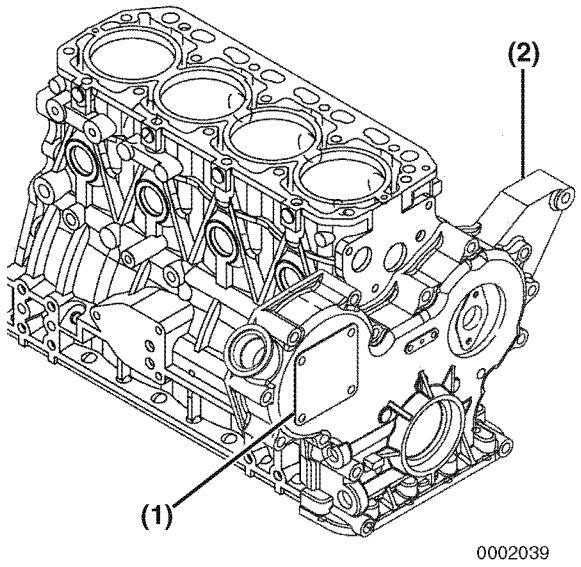

Figure 7-13

Note: TNV82-88 shown.

16. To position the fuel injection pump for easier removal and installation, install a dial indicator *(see Checking and Adjusting Fuel Injection Timing on page 7-30)* into the injection pump plunger opening. Using a wrench on the crankshaft pulley bolt, rotate the crankshaft until the dial indicator shows that injection pump plunger is at the bottom of it's stroke.
17. To aid in reassembly, make reference marks on the fuel injection pump drive gear, and on either the gear case cover or idler gear.

CAUTION

After marking the position of the pump drive gear, do not rotate the engine crankshaft. Rotating the crankshaft will cause the fuel injection pump to become misaligned.

0000048en

- On TNV82-88 model engines, the idler gear is not visible. Make a reference mark on the fuel injection pump drive gear **(Figure 7-14, (1))** and a matching mark on the bore of the gear case opening **(Figure 7-14, (2))**.

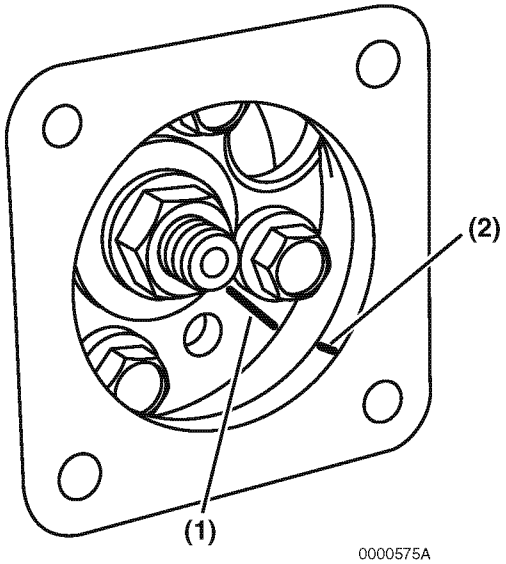

Figure 7-14

- On TNV94 - 106 model engines, the idler gear is visible. Make a reference mark **(Figure 7-15, (1))** across both the fuel injection pump drive gear and the idler gear.

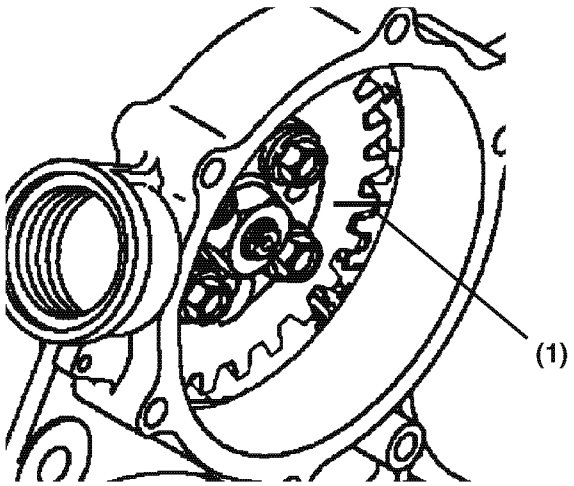

Figure 7-15

CAUTION

Do not loosen or remove the four bolts retaining the fuel injection pump drive gear to the fuel injection pump hub. Do not disassemble the fuel injection pump drive gear from the hub. Correct fuel injection timing will be very difficult or impossible to achieve.

0000031en

18. Do not loosen or remove the four bolts **(Figure 7-16, (3))** retaining the pump drive gear to the hub. Only remove the single drive gear nut **(Figure 7-16, (1))** and washer **(Figure 7-16, (2))**, leaving the hub attached to the gear.

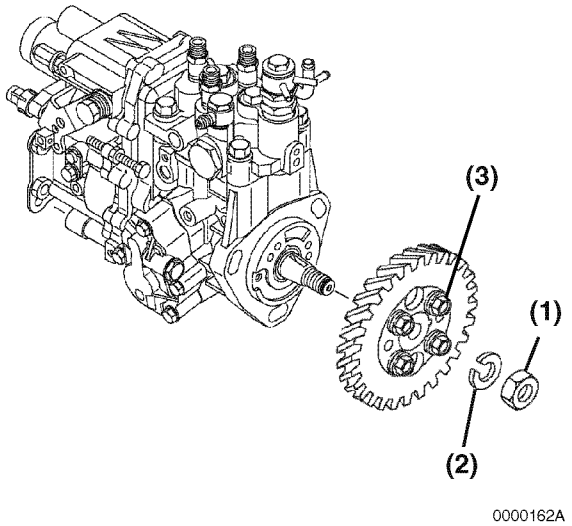

Figure 7-16

19. Hold the gear train using a large socket wrench on the crankshaft pulley nut. Loosen the fuel injection pump drive gear retaining nut **(Figure 7-16, (1))** and turn it out to the end of the fuel injection pump shaft.
20. Remove the pump drive gear and hub as an assembly using an appropriate two-bolt gear puller **(Figure 7-17).**

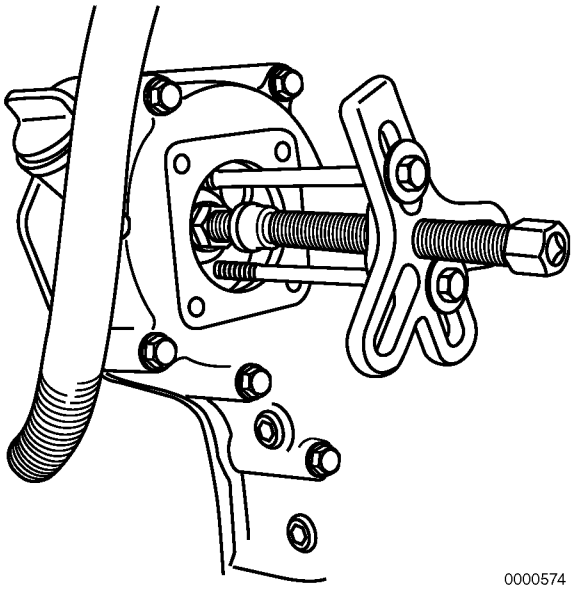

Figure 7-17

Note: On TNV82 - 88 models the injection pump drive gear will remain “captured” in the gear case. On TNV94 - 106 models, the injection pump drive gear can be removed through the gear case cover opening.

21. Once the fuel injection pump drive gear and hub assembly has “popped” loose from the tapered fuel injection pump drive shaft, carefully remove the drive gear nut **(Figure 7-18, (1))** and lock washer **(Figure 7-18, (2))**.

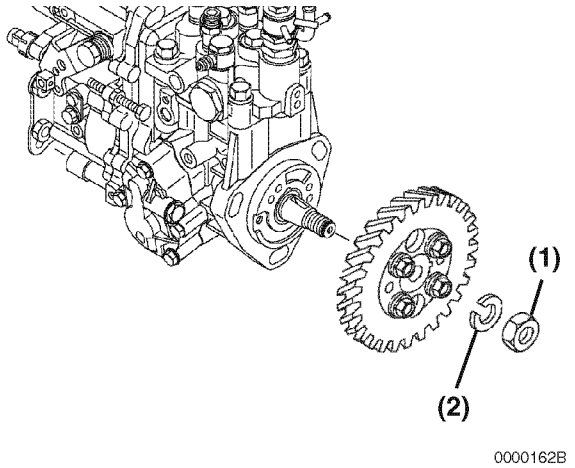

Figure 7-18

22. Locate the mark stamped into the upper outside mounting boss of the fuel injection pump. Highlight this mark and make a corresponding mark on the gear case or front plate **(Figure 7-19, (1)).**

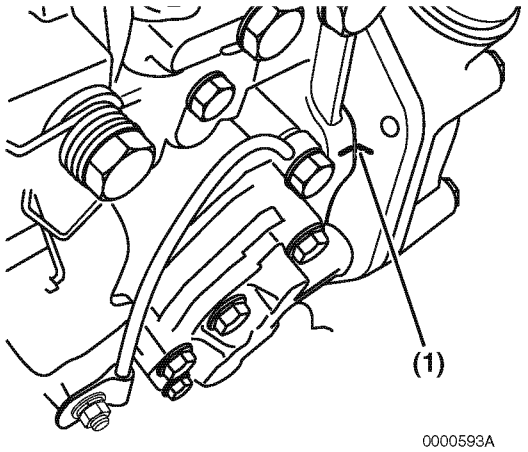

Figure 7-19

Note: Some model engines may require the intake manifold and fuel injection pump insulator **(Figure 7-20, (2))** be removed to access the inner fuel injection pump **(Figure 7-20, (1))** retaining nuts.

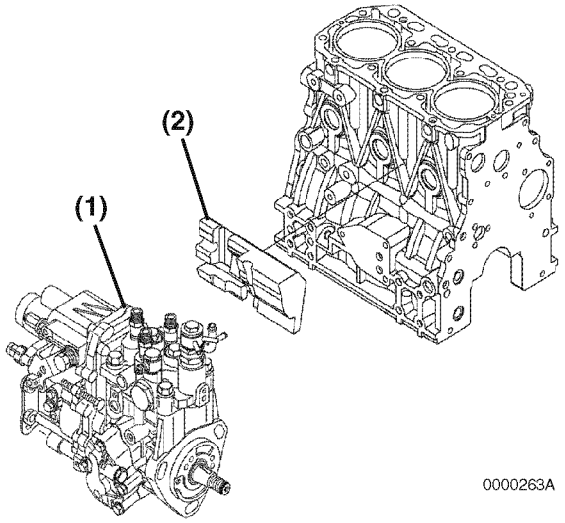

Figure 7-20

23. If required, remove the intake manifold and fuel pump insulator to access the fuel injection pump mounting nuts.

Note: The MP2 fuel injection pumps (TNV82 - 88 model engines) are fastened to the gear case with three (3) studs and nuts. The MP4 fuel injection pumps (TNV94 - 106 model engines) are fastened to the gear case with four (4) studs and nuts.

24. Remove the fuel injection pump **(Figure 7-20, (1))**. For purposes of future injection timing purposes, record the fuel injection pump timing index number located on the boss on the engine side (back) of the of the fuel injection pump **(Figure 7-21, (1))**.

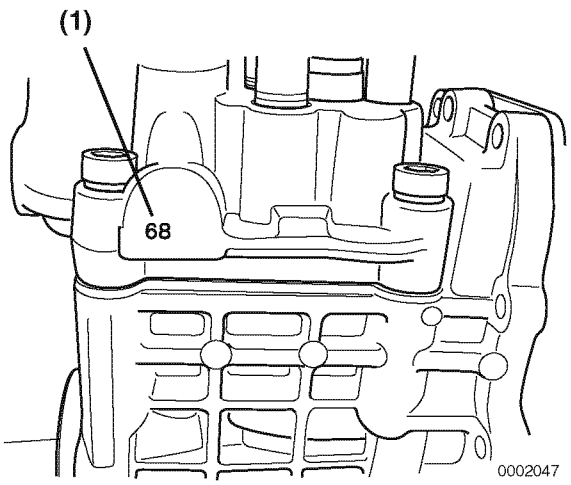

Figure 7-21

CAUTION

Do not rotate the crankshaft with the injection pump removed.

0000083en

25. If the fuel injection pump requires servicing, it must be sent to an authorized Yanmar FIE repair facility for repair and calibration, or replaced with a new fuel injection pump.

CAUTION

- **NEVER remove or attempt to remove the tamper-proof devices from the full-load fuel adjusting screw or the high-speed throttle limit screw on the fuel injection pump and governor assembly. These adjustments have been made at the factory to meet all applicable emissions regulations and then sealed.**
- **NEVER attempt to make any adjustments to these sealed adjustment screws. If adjustments are required, they can be made only by a qualified fuel injection shop that will ensure the injection pump continues to meet all applicable emissions regulations and then replace the tamper-proof seals.**
- **Tampering with or removing these devices may void the "Yanmar Limited Warranty."**

0000146en

Installation of Fuel Injection Pump

For electronically controlled engine

⚠ WARNING

- **Replacing the fuel injection pump involves rewriting the fuel injection data in the E-ECU.**
  Be sure to contact your local Yanmar dealer before replacing the fuel injection pump.
  Failure to rewrite the fuel injection data before replacing the fuel injection pump will void the engine warranty.
- **Improper use or misuse of the E-ECU may result in death or serious injury due to an abrupt and unexpected increase in engine speed.**

9999997en

IMPORTANT

If installing a new or recalibrated fuel injection pump, locate and record the timing index number located on the pump housing boss on the engine side of the new or recalibrated fuel injection pump ***(Figure 7-22, (1))****. This number will be used to calculate and adjust the final fuel injection timing.*

Note: If either or both of the fuel injection pumps do not have a timing index number, note the injection pump ID (example: XK42) on the injection pump ID label.

To locate the timing index number for the engine being serviced use the Timing Index Chart under "FIE Specs" on the Yanmar Distributor Website (http://distributor.yanmar.co.jp).

If additional assistance is needed in locating the engine timing index number *See To Locate an Authorized Yanmar Industrial Engine Dealer or Distributor: on page 2-4* and follow the instructions to locate an authorized Yanmar industrial engine dealer or distributor for assistance.

Note: Treat the timing index number as if it has a decimal point (68 = 6.8).

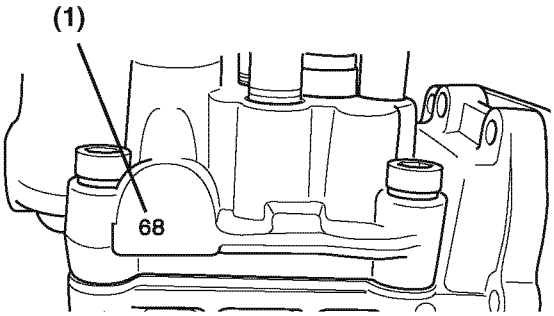

Figure 7-22

1. Align the pump drive gear with the idler gear using the reference marks made earlier.
   TNV82 - 88 model engines **(Figure 7-23, (1))**.
   TNV94 - 106 model engines **(Figure 7-24, (1))**.

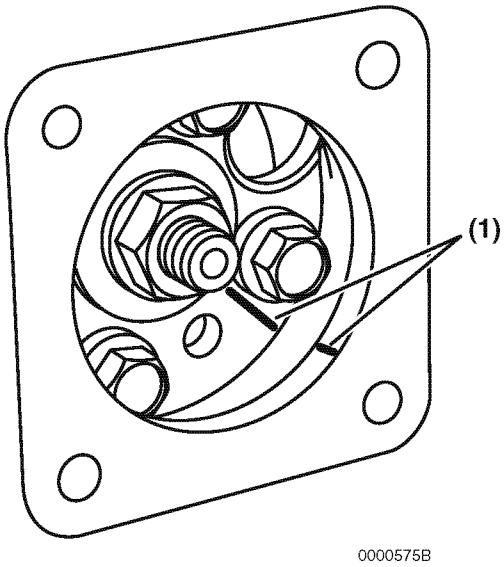

Figure 7-23

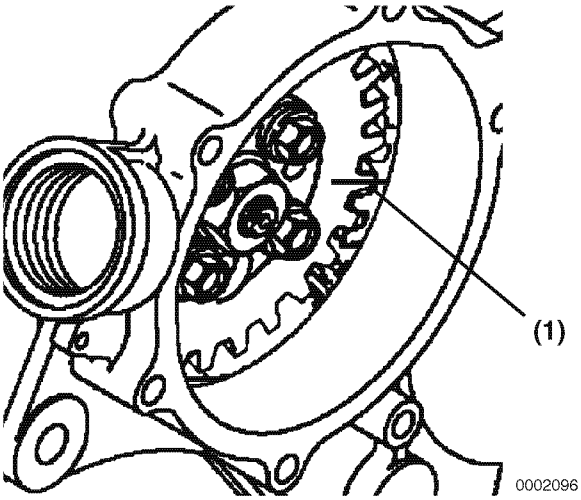

Figure 7-24

2. If installing the fuel injection pump on an engine with the front gear case cover removed, the fuel injection pump drive gear can be aligned with the idler gear by aligning the stamped marks **(A, B, C)** on the fuel injection pump drive gear, idler gear, and crankshaft drive gear. Ensure all three timing marks **(Figure 7-25, (A, B, C)) are aligned.**

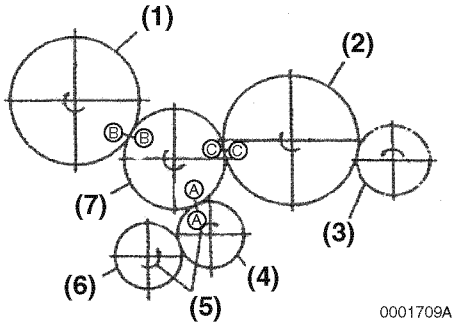

1 – Fuel Injection Pump Drive Gear
2 – Camshaft Drive Gear
3 – Auxiliary Drive Gear (Optional)
4 – Crankshaft Drive Gear
5 – Direction of Rotation
6 – Oil Pump Drive Gear (4TNV94L - 4TNV106)
7 – Idler Gear

Figure 7-25

3. Install a new O-ring on the pump mounting flange. Apply grease to the O-ring to hold it in place during installation of the injection pump.

Note: Ensure the tapered surface of the fuel injection pump shaft is clean and dry.

4. Align the key on the fuel injection pump shaft with the keyway in the fuel injection pump drive gear hub. Reinstall the fuel injection pump into the fuel injection pump drive gear and gear housing. Reinstall the pump retaining nuts finger tight.
5. Reinstall the fuel injection pump drive gear lock washer **(Figure 7-26, (2))** and nut **(Figure 7-26, (1))**. Do not lubricate the threads of the nut or shaft. Hold the crankshaft pulley bolt with a socket wrench and tighten the drive gear nut to the specified torque. *See Special Torque Chart on page 7-11.*

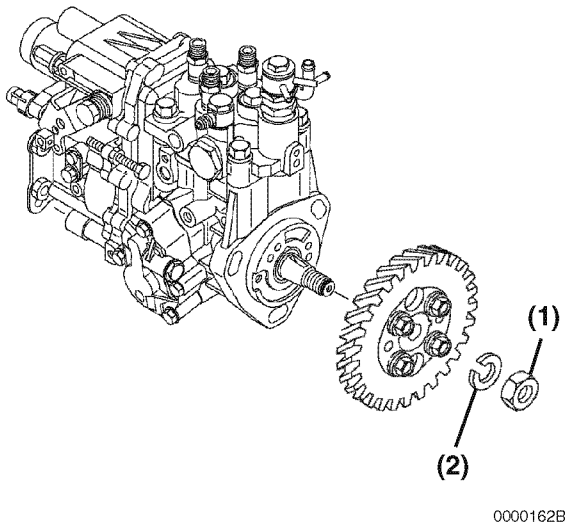

Figure 7-26

If reinstalling the original fuel injection pump:

- Align the reference marks **(Figure 7-27, (1))** previously made on both the fuel injection pump mounting flange and gear case or front plate.

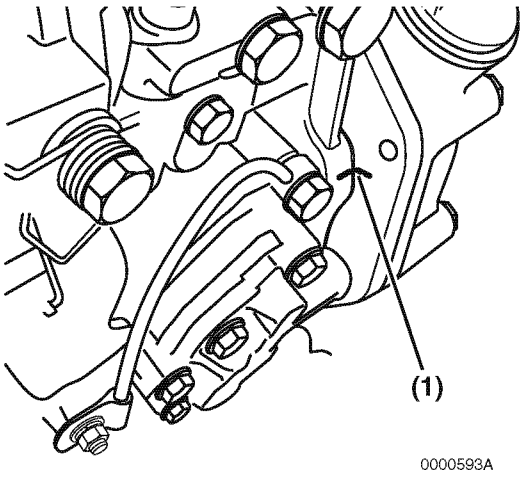

Figure 7-27

- Tighten the fuel injection pump retaining nuts to specification. *See Special Torque Chart on page 7-11.*

If installing a new fuel injection pump:

- Reinstall the timing grid sticker, provided with the new fuel injection pump, onto the back of the gear case / front plate **(Figure 7-28).** Align the "standard mark" **(Figure 7-28, (1))** with the reference mark **(Figure 7-28, (2))** made on the gear case during disassembly.

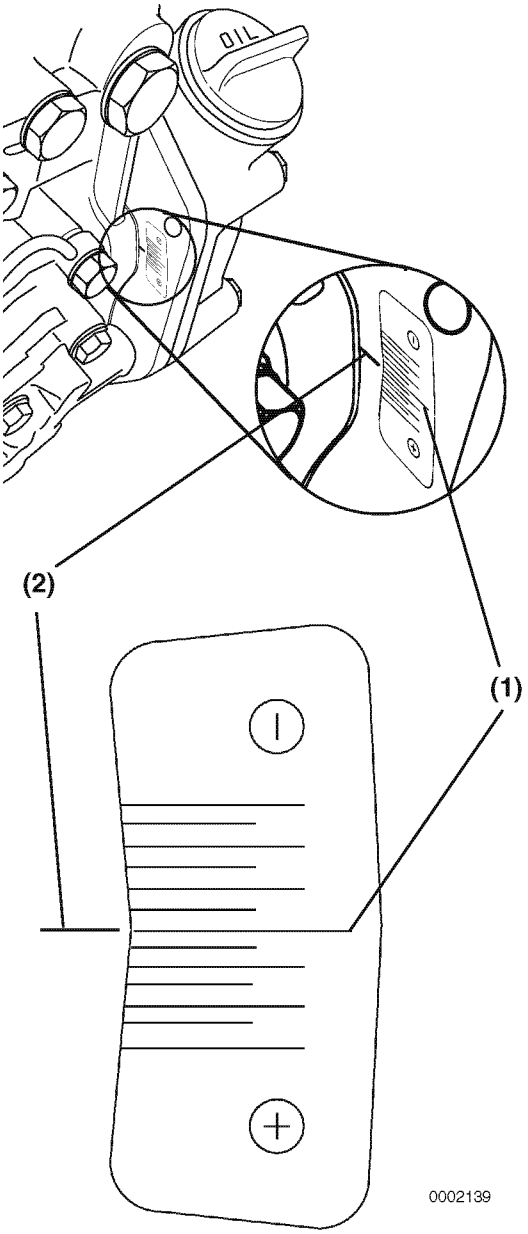

Figure 7-28

- Calculate the difference between the timing index numbers **(Figure 7-29, (1))** of the fuel injection pump that you removed and the replacement fuel injection pump. *See Calculation Example below.*

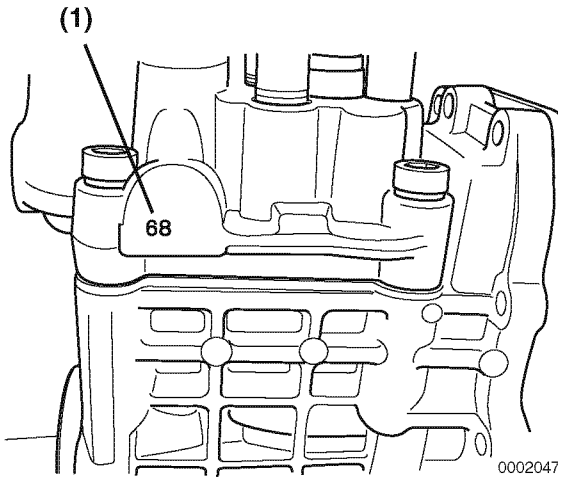

Figure 7-29

Adjusting the fuel injection timing to compensate for the difference in pump timing index numbers:

Calculation Example

Timing Index Number	
Original injection pump=	6.8
Replacement injection pump=	7.3
Difference=	+0.5

- If the difference between the timing index numbers is a positive number, the fuel injection pump mounting position must be advanced **(Figure 7-30, (2))** (rotated away from the engine) as compared to the "standard mark" **(Figure 7-30, (1))** by the calculated positive amount, adjust the fuel injection pump to the calculated value.
- If the difference between the timing index numbers is a negative number, the replacement injection pump must be retarded **(Figure 7-30, (3))** (rotated toward the engine) by the calculated negative amount.
- Each mark on the timing sticker represents 0.5° timing change.

The above calculated difference indicates that the replacement fuel injection pump is to be installed at +0.5° (advanced) from the "Standard Mark" **(Figure 7-30, (1))** on the timing sticker.

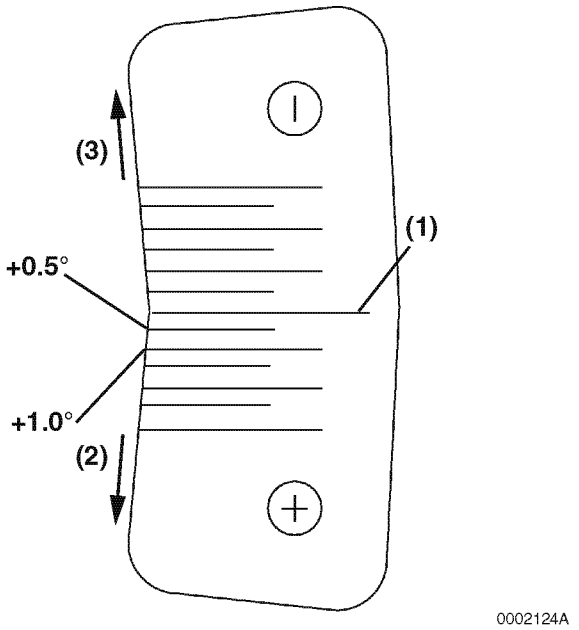

Figure 7-30

In this case, rotate the top of the fuel injection pump away from the cylinder block until the mark on the outside upper mounting boss **(Figure 7-31, (1))** of the fuel injection pump aligns with the +0.5° mark on the timing sticker.

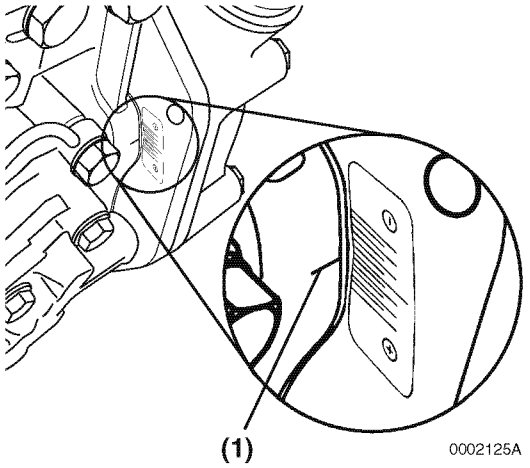

Figure 7-31

Tighten the fuel injection pump mounting nuts to specification. *See Special Torque Chart on page 7-11.*

6. Reinstall the rear bracket(s) **(Figure 7-32, (1))** to the fuel injection pump. Tighten the rear support bolts.

Note: Configuration of the fuel injection pump rear brackets may vary depending on the model.

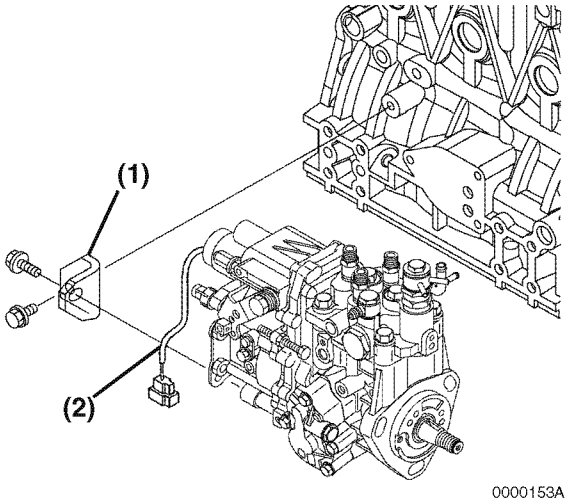

Figure 7-32

7. Reconnect the throttle linkage and the stop solenoid connector **(Figure 7-33, (2))**.
8. Reconnect the lube oil line **(Figure 7-33, (1))** and clamp **(Figure 7-33, (2))**.

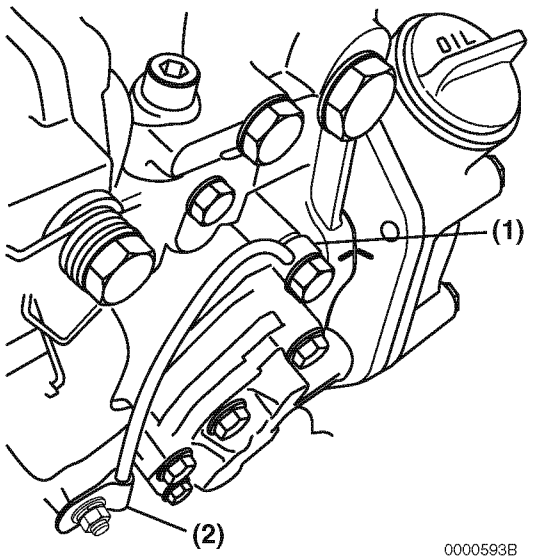

Figure 7-33

9. Apply ThreeBond Liquid Gasket No. 1212, Yanmar Part No. 977770-01212, or equivalent sealant to the sealing surface of the pump cover. Install the pump cover and tighten the cover bolts.
10. Reconnect the fuel return lines, fuel supply line and coolant lines to the fuel injection pump.
11. Reinstall the fuel injection high-pressure lines. Tighten the nuts to specification. *See Special Torque Chart on page 7-11.*

IMPORTANT

When reinstalling a new or repaired fuel injection pump, it is important to add engine oil to the fuel injection pump to provide lubrication for initial start-up. Add 5-7 oz (150-200 cc) of clean engine oil to the fuel injection pump at the fill plug located in the upper outside section of the governor housing.

12. If equipped, verify the fuel injection pump insulator **(Figure 7-34, (2))** is not damaged. Reinstall the insulator and intake manifold if previously removed.

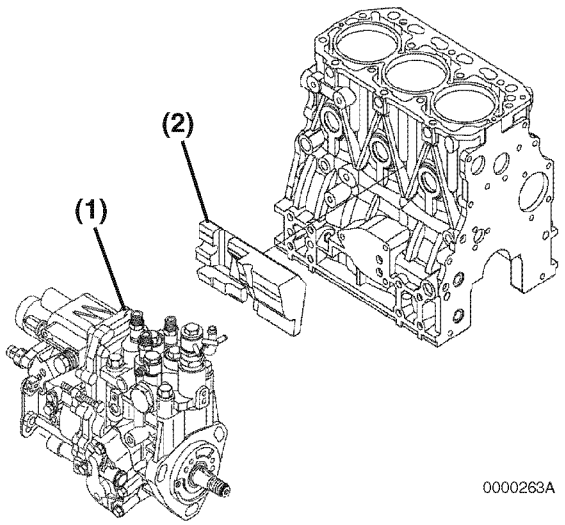

Figure 7-34

13. Reinstall the coolant pump V-pulley **(Figure 7-35, (4))**, spacer **(Figure 7-35, (3))** (if equipped) and engine coolant fan **(Figure 7-35, (2))**.

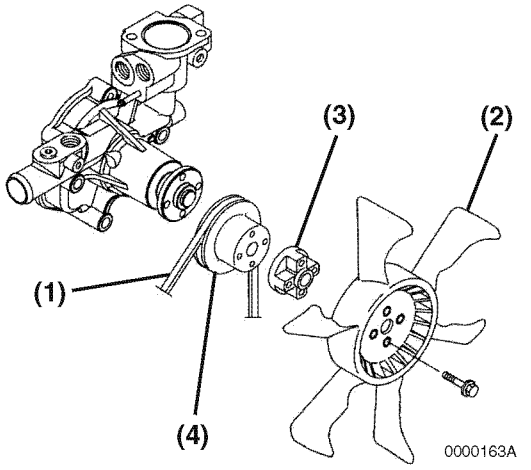

Figure 7-35

14. Reinstall the cooling fan V-belt **(Figure 7-35, (1))**. Adjust it as described in *Check and Adjust Cooling Fan V-Belt on page 5-22.*
15. Reinstall the cooling fan guard (if equipped).

16. Prime the fuel system. *See Priming the Fuel System on page 4-15.*
17. Operate the engine and check for fuel and coolant leaks.

CHECKING AND ADJUSTING FUEL INJECTION TIMING

Determining the Fuel Injection Timing Specification

1. Locate and record the fuel injection pump timing index number **(Figure 7-37, (1))** stamped into the boss on the engine side of the fuel injection pump housing **(Figure 7-36, (1))**. Treat this number as though there is a decimal point between the two digits. i.e. 68 = 6.8

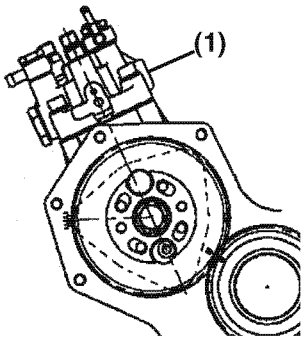

Figure 7-36

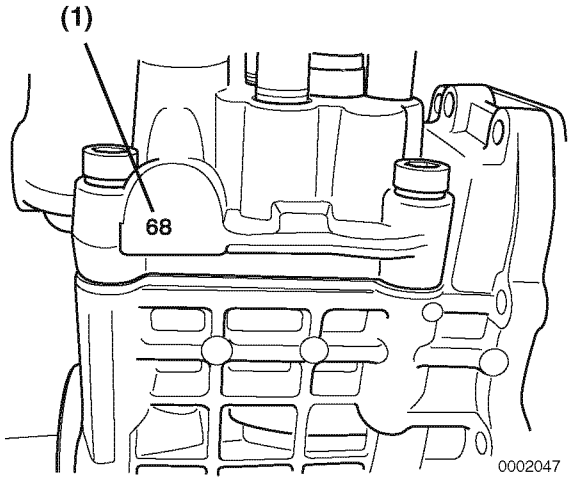

Figure 7-37

2. Using the FIR number for the engine being serviced use the Fuel Injection Reference (FIR) Chart under "FIE Specs" on the Yanmar Distributor Website (http://distributor.yanmar.co.jp).

   The FIR number is determined by the complete engine model number. The engine model number is located on the engine nameplate **(Figure 7-38)**.

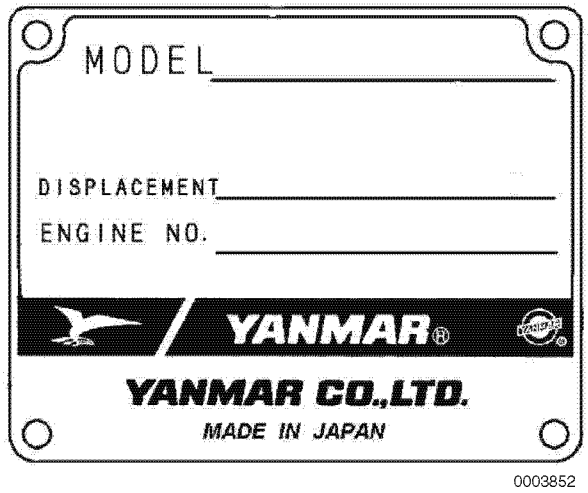

Figure 7-38

EXAMPLE: The following example is for an engine model 3TNV82A-DSA.

- Find the engine model number in the FIR chart. Locate and record the FIR number (The FIR number for this engine is 4).
- Insert the numbers you have recorded into the following equation:

(Fuel Injection Pump Timing Index Number X 2) + FIR Number = FIT° (Fuel injection Timing in Degrees)

(6.8 X 2) = 13.6 + 4 = 17.6° Fuel injection Timing

- Record the calculated fuel injection timing specification.

Checking Fuel Injection Timing

Note: Some fuel may drain from the fuel injection pump during this process. Make provisions to contain any such spillage.

1. Turn off the fuel valve in the fuel supply hose and the fuel return hose.
2. Clamp shut the fuel injection pump fuel return hose leading to fuel filter **(Figure 7-39, (1))**.

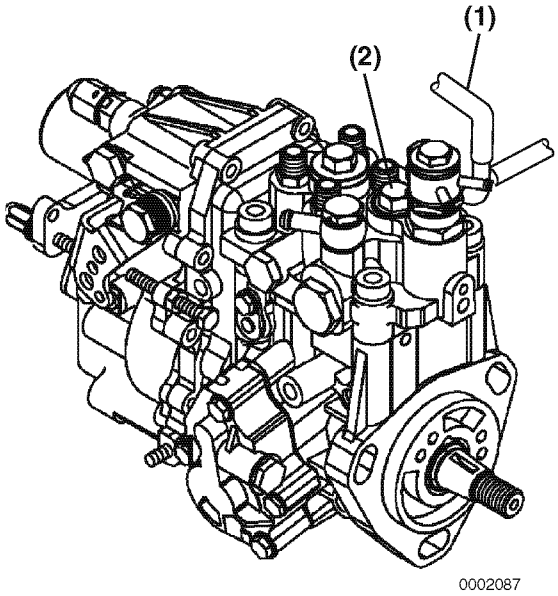

Figure 7-39

IMPORTANT

Clean the top of the fuel injection pump to prevent any contamination when the fuel injection pump plunger plug is removed.

3. Remove the forward fuel injection pump plunger plug **(Figure 7-39, (2))** on the top of the fuel injection pump.
4. Install a dial indicator adapter and clamp into the pump plunger opening.

Note: Use the Yanmar part no. 158090-51831 M14 adapter for the MP2 fuel injection pumps (TNV82 - 88 model engines) or Yanmar part no. 158090-51841 for the M16 adapter used on the MP4 fuel injection pumps (TNV94 - 106 model engines) and Yanmar part no. 23000-013000 plunger adapter clamp **(Figure 7-40,** (1)).

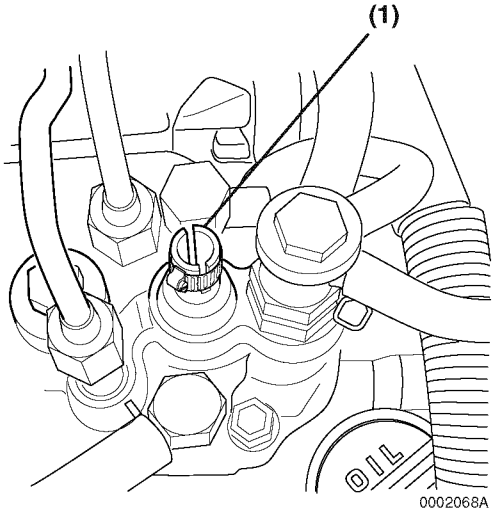

Figure 7-40

5. Install a dial indicator **(Figure 7-41, (1))**, Mitutoyo No. 2050SB or equivalent, with a 30 mm extension, Yanmar part no. 158090-51870 or Mitutoyo No. 303613, into the adapter. Secure with the Yanmar part no. 23000-013000 plunger adapter clamp **(Figure 7-40,** (1)) at approximately the mid-point of its travel.

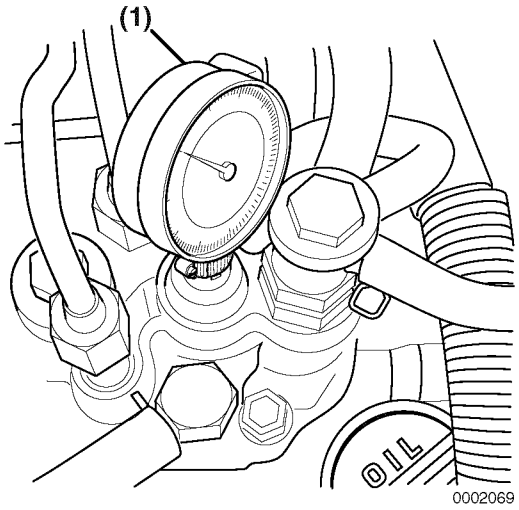

Figure 7-41

Note: The following references to the direction-of-rotation are facing the coolant pump end of the engine and are adjusted by turning the crankshaft pulley.

6. Using a wrench on the crankshaft pulley bolt, rotate the crankshaft in a clockwise direction while looking through the flywheel inspection port **(Figure 7-42, (1))**. Rotate the crankshaft until the injection timing marks on the flywheel are visible.

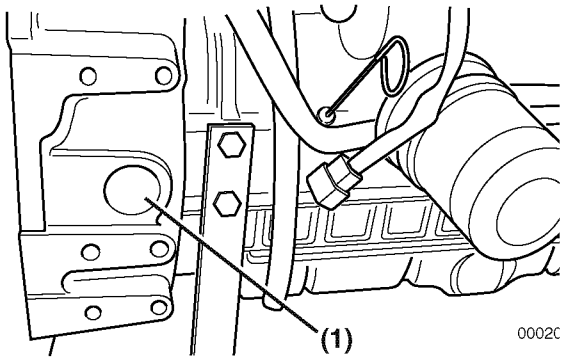

Figure 7-42

7. Typical flywheel markings are as shown in **(Figure 7-43, (1))**.

Note: A typical flywheel will have multiple timing grids depending on the number of cylinders. Any grid can be used to check the fuel injection timing.

The flywheel shown in **Figure 7-43** is for a Yanmar "Standard Specification" DI engine. Flywheels used on some "OEM Specific" DI engines may be marked differently. You should contact that specific OEM for information on the identification of the timing marks.

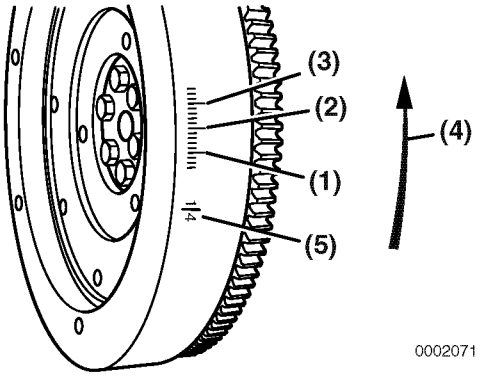

1 – 10° BTDC (Before Top Dead Center)
2 – 15° BTDC
3 – 20° BTDC
4 – Direction of Rotation
5 – TDC (Top Dead Center)

Figure 7-43

Note: The TDC (Top Dead Center) mark can be identified by the cylinder numbers stamped near the TDC mark on the flywheel.

If you are uncertain as to the timing degree designation of the timing marks on the flywheel timing grid, you can determine the timing degree designation by measuring the timing grid.

- First measure the distance between two of the "longer" marks on the timing grid. (They are 5° apart.) Then measure the distance from the TDC mark to the first "longer" mark on the timing grid. Divide that measurement by the distance between the two "longer" marks. The resulting answer will tell you how many degrees there are between the TDC mark and the first "longer" mark.

- EXAMPLE: If the distance between the two "longer" marks is approximately 2.0 cm and the distance from the TDC mark is approximately 4.0 cm, the answer is approximately 2. This indicates there is 10° (2 x 5°) between the TDC mark and the first "longer" mark on the timing grid. That means the first "longer" mark on the timing grid indicates 10° BTDC, the second "longer" mark indicates 15° BTDC and the third timing mark indicates 20° BTDC. If the answer is 3, that indicates there is 15° (3 x 15°) between the TDC mark and the first "longer" mark and that the first "longer" mark indicates 15° BTDC with the second and third "longer" marks indicating 20° BTDC and 25° BTDC respectively.

8. Highlight the timing reference mark **(Figure 7-44, (2))** on the flywheel housing or engine back plate **(Figure 7-45, (2))**. Highlight the TDC (Top Dead Center) mark **(Figure 7-44, (1))** on the flywheel.
9. Highlight the target timing mark **(Figure 7-45, (1))** on the flywheel as calculated in *Determining the Fuel Injection Timing Specification on page 7-30.*

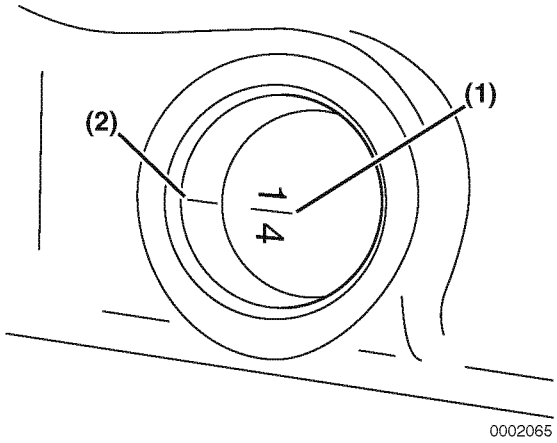

Figure 7-44

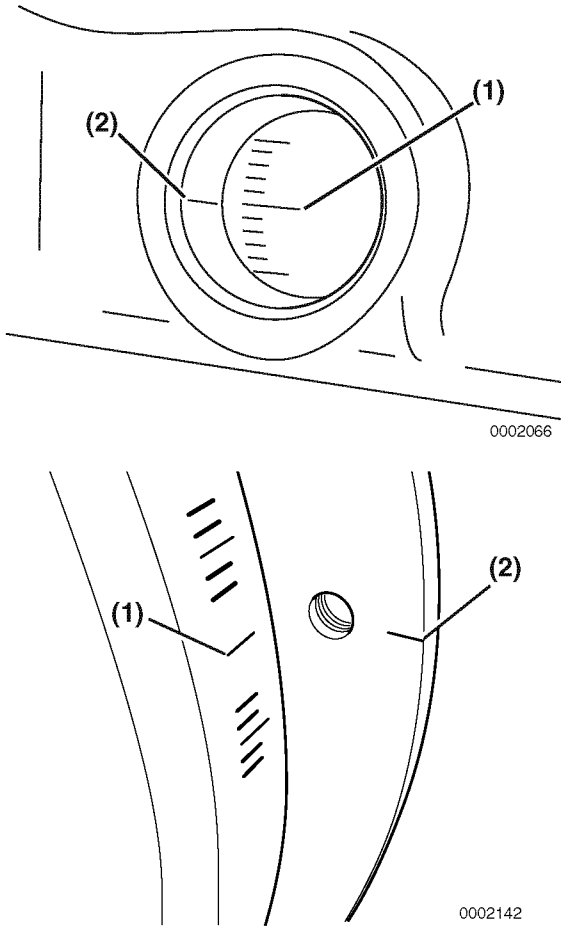

Figure 7-45

10. Rotate the crankshaft counter-clockwise until the dial indicator shows that the injection pump plunger is at the bottom of its stroke. Rock the crankshaft back and forth slightly to confirm a point where the dial indicator shows no movement. Zero the dial indicator.
11. Slowly rotate the crankshaft clockwise until the dial indicator shows a pump plunger lift of 2.5 mm (0.098 in.).
12. Check the position of the flywheel target timing mark (previously determined) **(Figure 7-45, (1))** in relation to the timing reference mark **(Figure 7-45, (2))** on the flywheel housing or engine back plate. If the two marks are aligned, the fuel injection timing is correct. If the marks do not align, the fuel injection timing must be adjusted. *See Adjusting Fuel Injection Timing on page 7-34.*

13. If the injection timing is correct, remove the dial indicator and adapter. Replace the pump plunger plug and its copper gasket and tighten to specifications. Replace the flywheel inspection port cover. Open the fuel supply valve and remove the clamp from the fuel supply hose and the fuel return hose.
14. Prime the fuel system. Operate the engine and check for leaks.

Adjusting Fuel Injection Timing

If the timing marks did not align when performing the *Checking Fuel Injection Timing on page 7-31*, the following steps must be performed to properly time the engine.

1. Leave the dial indicator installed in the fuel injection pump. Do not disturb the reading on the dial indicator.
2. Rotate the flywheel until the target timing mark **(Figure 7-46, (1))** and the timing reference mark **(Figure 7-46, (2))** on the flywheel housing or back plate are aligned.

IMPORTANT

Do not rotate the crankshaft during the remainder of this procedure.

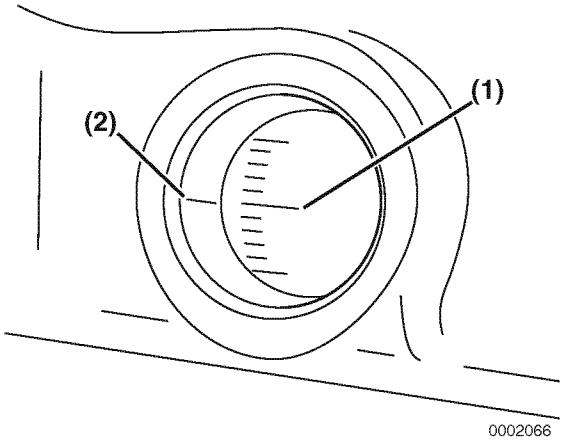

Figure 7-46

3. Note the reading on the dial indicator **(Figure 7-47, (1))**. If the reading is less than 2.5 mm (0.098 in.), the fuel injection timing is "retarded." If the dial indicator reading is greater than 2.5 mm (0.098 in.), the fuel injection timing is "advanced."

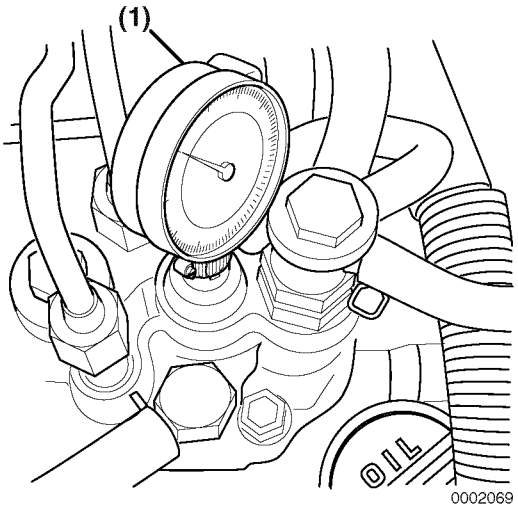

Figure 7-47

Note: Some model engines require the intake manifold and fuel injection pump insulator be removed to access the inner fuel injection pump retaining nuts.

4. Loosen the nuts fastening the fuel injection pump to the gear case or front plate. Loosen the rear bracket(s) on the fuel injection pump.

Note: Loosening the high-pressure injection line nuts on the fuel injection pump may make rotating the pump easier.

5. Rotate the fuel injection pump until the dial indicator reads 2.5 mm (0.098 in.).
6. To "advance" the injection timing, rotate the top of the fuel injection pump away from the engine.
7. To "retard" the injection timing, rotate the top of the fuel injection pump toward the engine.
8. When the dial indicator reads 2.5 mm (0.098 in.) of pump plunger lift and the target timing mark on the flywheel aligns with the reference mark on the flywheel housing or engine back plate, the injection timing is correct.

9. Tighten the fuel injection pump mounting nuts and rear bracket(s).
10. Remove the dial indicator and adapter. Replace the plug in the pump plunger opening and tighten it to specification. If removed, install the intake manifold and pump insulator. Tighten the high-pressure injection line nuts to specification. Open the fuel supply valve, remove the clamp from the fuel return line and prime the fuel system. Operate the engine and check it for leaks.

FUEL INJECTORS

Removal of Fuel Injectors

2-Valve Cylinder Head

1. Close any fuel valves in the fuel supply line.
2. Remove the high-pressure fuel injection lines as an assembly **(Figure 7-48, (1))**.

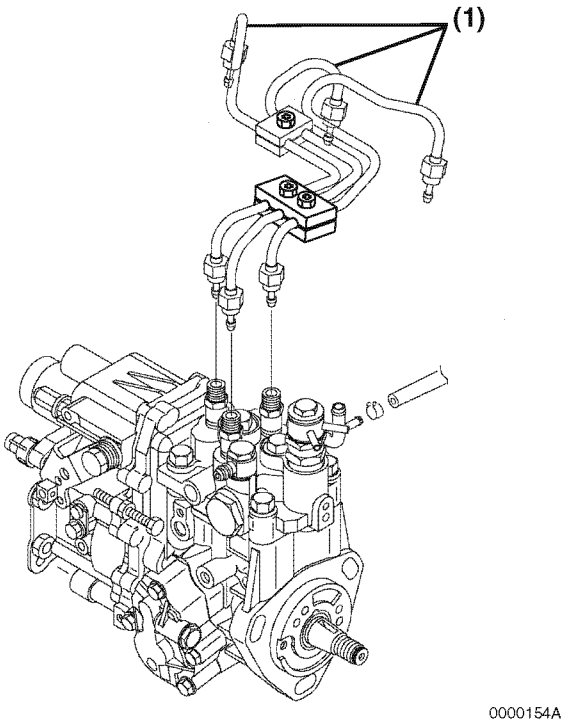

Figure 7-48

Note: To prevent "rounding" the fuel line nuts always use a "line" or "flare nut" wrench. When loosening the fuel line nuts, always hold the fuel injection pump delivery valves with a "back up" wrench to prevent loosening.

- Loosen the fuel line nuts at the fuel injectors and then at the fuel injection pump.

CAUTION

Remove or install the high-pressure fuel injection lines as an assembly whenever possible. Disassembling the high-pressure fuel injection lines from the retainers or bending any of the fuel lines will make it difficult to reinstall the fuel lines.

0000047en

- Finish loosening all the fuel line nuts and remove the high-pressure fuel lines as an assembly being careful not to bend any of the fuel lines. Be sure to protect the fuel system from contamination by covering all open connections.

3. Remove the return fuel hoses **(Figure 7-49, (1))** from one side of each fuel injector.
4. Remove the bolts and washers that secure the fuel injector retainers **(Figure 7-49, (2))** to the cylinder head.
5. Remove the fuel injector retainer.

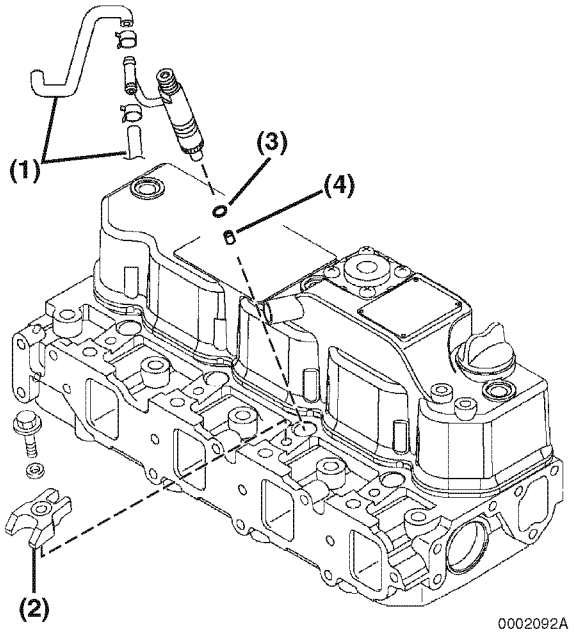

Figure 7-49

6. Remove the fuel injector.

Note: The fuel injectors can usually be removed by manually pulling them out of the fuel injector wells. If the fuel injectors cannot be manually removed, use the fuel injector removal tool, Yanmar Part No. 129470-92305, and a slide-hammer puller **(Figure 7-50)**.

- Attach a slide-hammer puller to the fuel injector removal tool using a 3/8-16 puller rod.

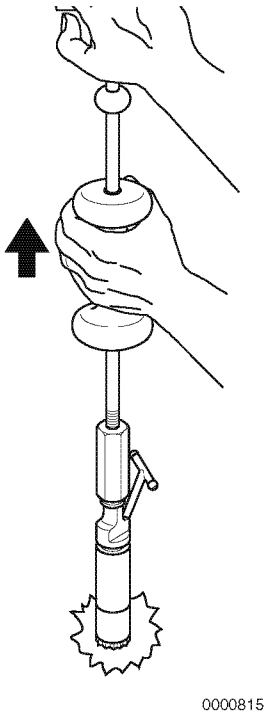

Figure 7-50

- Tap the fuel injector out of the cylinder head using the slide hammer.

7. Remove the injector nozzle protector **(Figure 7-49, (3))** and seat **(Figure 7-49, (4))** from the cylinder head.
8. Repeat the steps to remove the remaining fuel injectors.

4-Valve Cylinder Head

1. Close any fuel valves in the fuel supply line.
2. Remove the valve cover. *See Removal of Valve Cover on page 6-37.*
3. Remove the injector return line **(Figure 7-51, (1))**. Be careful not to bend the line.
4. Remove the fuel injector mounting clamp bolts **(Figure 7-51, (2))**. Lift the injector mounting clamps **(Figure 7-51, (3))** away from injector.
5. Remove the fuel injector **(Figure 7-51, (4))** from the cylinder head.

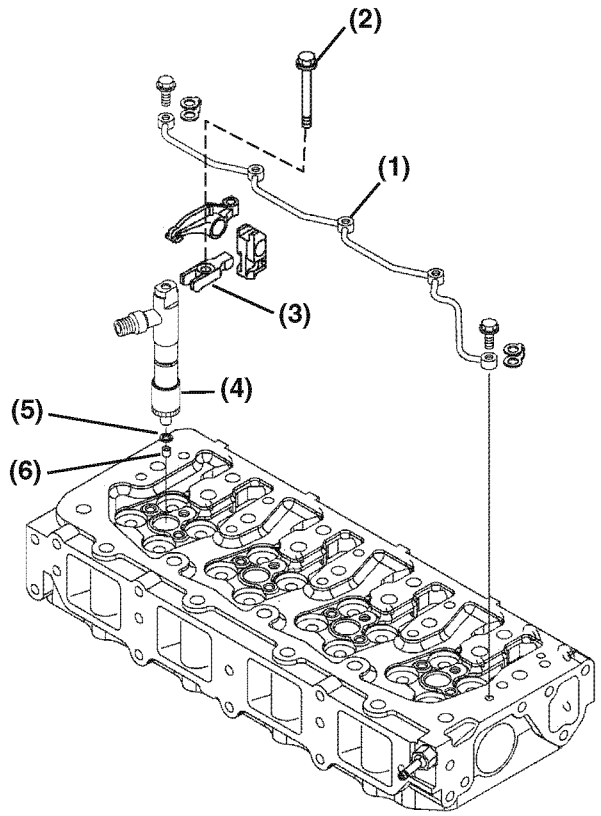

Figure 7-51

Note: The fuel injectors can be removed by manually pulling them out of the fuel injector wells.

6. Remove the injector nozzle protector **(Figure 7-51, (5))** and seat **(Figure 7-51, (6))** from the cylinder head. Discard both items.
7. Repeat steps to remove the remaining fuel injectors.

Testing of Fuel Injectors

CAUTION

Never use a steel wire brush to clean fuel injectors. Damage to the nozzle and other components is likely to result.

0000172en

1. Thoroughly clean the fuel injector nozzle using clean diesel fuel and a brass wire brush.
2. Visually inspect the fuel injectors and nozzle protectors for deposits or damage. Clean, repair or replace as necessary.

Note: For testing the fuel injector using an injection nozzle tester. Operate the tester following the information provided by the tester manufacturer. Use clean, filtered fuel or FIE calibration fluid for the test.

3. Using the correct adapter, connect a fuel injector to a nozzle tester. Aim the fuel injector into a suitable container to catch the fuel spray.

WARNING

- **Never inject fuel toward you. Since the fuel is injected at high pressure from the nozzle, it may penetrate the skin, resulting in injury.**
- **Never inject fuel toward a fire source. Atomized fuel is highly flammable and may cause a fire or burn skin.**

0000028en

CAUTION

FLYING OBJECT HAZARD!

- **ALWAYS wear eye protection when servicing the engine and when using compressed air or high-pressure water. Dust, flying debris, compressed air, pressurized water or steam may injure your eyes.**
- **Failure to comply may result in minor or moderate injury.**

0000003en

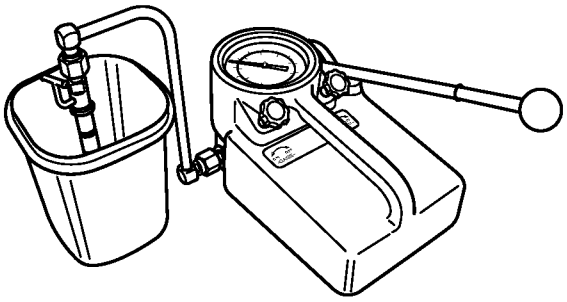

Figure 7-52

4. Pump the operating lever of the tester slowly, observing the pressure reading at the point where the fuel injector begins spraying fuel **(Figure 7-52)**.

   See **Figure 7-55** for injector ID location.

   See Test and Adjustment Specifications on page 7-12 for correct pressure readings.

Note: The opening pressure of a new fuel injector will be approximately 725 psi (5 MPa; 51 kgf/cm^2) higher than one that has been operated for five hours or longer.

5. Pump the operating lever slowly to hold the pressure steady at a point just below the opening pressure and hold it for 5 seconds. Observe the injector to see that it is sealing properly and is not "dripping". If fuel leaks from the return line fitting, check that the nozzle case nut is tight. Service or replace the injector if fuel continues to leak from either the return line fitting or nozzle.
6. Pump the operating lever more rapidly to repeatedly "pop" the injector and observe the spray pattern. The pattern should be a very fine uniform spray **(Figure 7-53).** If a dripping or an uneven pattern is seen **(Figure 7-54)**, service or replace the injector.

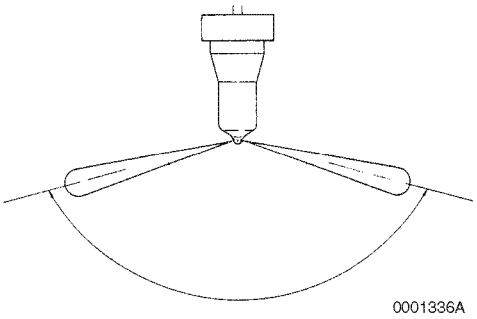

Figure 7-53

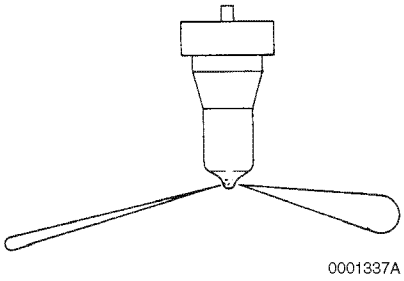

Figure 7-54

If the fuel injector fails any of these tests, it should be serviced or replaced as necessary. If the pressure is outside specified limits, adjust the pressure. *See Adjusting Fuel Injector Pressure on page 7-41.*

Disassembly and Inspection of Fuel Injectors

CAUTION

Never use a steel wire brush to clean fuel injectors. Damage to the nozzle and other components is likely to result.

0000172en

1. Clean carbon from used injectors using clean diesel fuel. Hardened deposits or varnish can be cleaned using a brass wire brush.

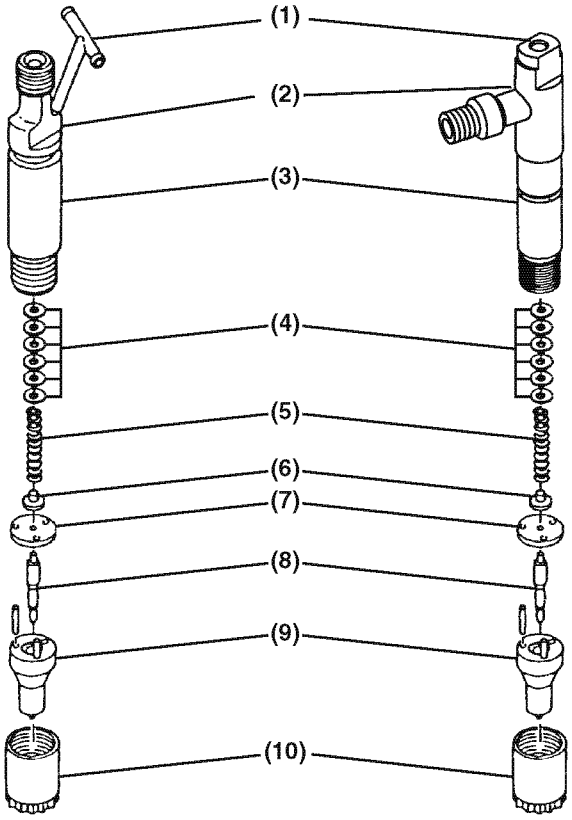

1 – Fuel Return Passage
2 – Injector ID Location
3 – Injector Body
4 – Pressure Adjusting Shims
5 – Spring
6 – Spring Seat
7 – Valve Stop Spacer
8 – Nozzle Valve
9 – Nozzle Body
10 – Nozzle Case Nut

Figure 7-55

2. Place the fuel injector in a soft-jawed vise with the nozzle pointing up.
3. Remove the nozzle case nut.
4. Carefully remove the injector from the vise.
5. Turn the injector over and remove the nozzle body, nozzle valve, valve stop spacer, nozzle spring seat, nozzle spring, and shims.
6. Inspect the sealing surfaces **(Figure 7-56, (2))** between the valve stop spacer and nozzle body for nicks or scratches. Check the contact area between the valve stop spacer and the nozzle valve **(Figure 7-56, (1))** for scoring, or pitting. Use a magnifier glass to inspect the area.

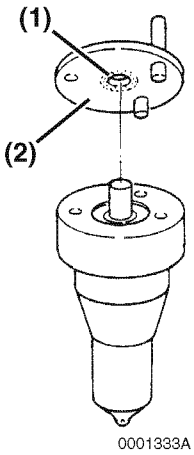

Figure 7-56

7. Perform a nozzle valve slide test:
   (a) Wash nozzle body and valve in clean diesel fuel.
   (b) While holding the nozzle body vertical, pull the nozzle valve about 2/3 of the way out **(Figure 7-57)**.
   (c) Release the valve. It should fall smoothly to its seat by it's own weight.

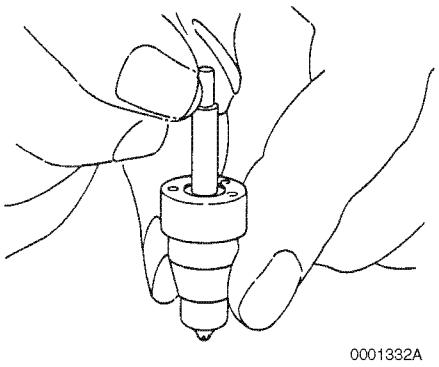

Figure 7-57

8. Replace the fuel injector assembly if it fails any inspection.

Adjusting Fuel Injector Pressure

The fuel injectors open when pressure reaches a predetermined pressure threshold. They close when the pressure is reduced below that threshold. The pressure threshold can be adjusted by adding or removing shims **(Figure 7-58, (3))**.

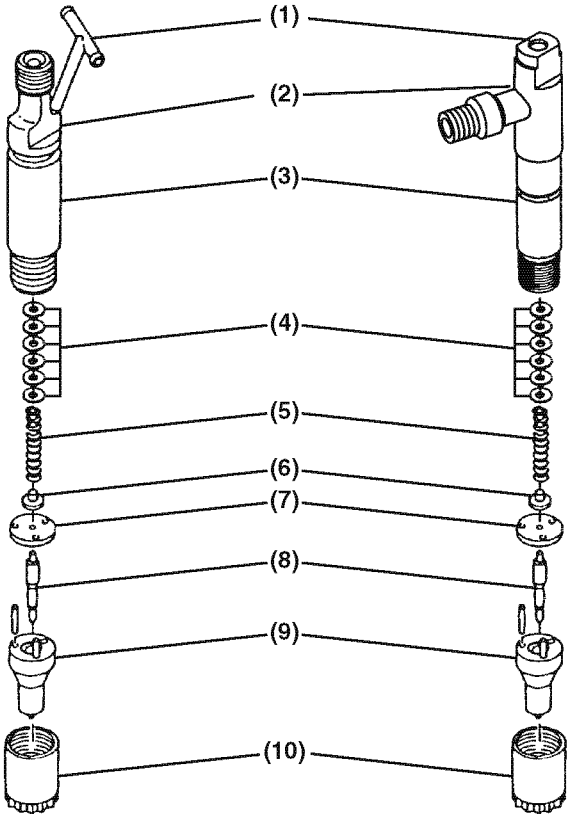

1 – Fuel Return Passage
2 – Injector ID Location
3 – Injector Body
4 – Pressure Adjusting Shims
5 – Spring
6 – Spring Seat
7 – Valve Stop Spacer
8 – Nozzle Valve
9 – Nozzle Body
10 – Nozzle Case Nut

Figure 7-58

The injection pressure will change by approximately 275 psi (1.9 MPa; 19 kgf/cm^2) for every 0.1 mm (0.004 in.) in shim thickness.

See the parts catalog for available shims.

CAUTION

Each pressure adjusting shim removed or added changes the pressure threshold by approximately 275 psi (1.9 MPa, 19 kgf/cm^2). Adding adjusting shims increases the threshold pressure. Removing adjusting shims reduces the pressure threshold.

0000081en

1. Disassemble the fuel injector assembly. *See Disassembly and Inspection of Fuel Injectors on page 7-39.*
2. Remove or add adjusting shims as needed.
3. Reassemble the fuel injector assembly. *See Reassembly of Fuel Injectors on page 7-41.*
4. Retest the fuel injector. *See Testing of Fuel Injectors on page 7-38.* If the injector cannot be adjusted to the appropriate pressure, discard the fuel injector.

Reassembly of Fuel Injectors

1. Secure the injector in a soft-jawed vise with the nozzle end up.
2. Reinstall the shims, nozzle spring, nozzle spring seat, valve stop spacer, nozzle valve, and nozzle body.
3. Reinstall the nozzle case nut. Tighten it to specification. *See Special Torque Chart on page 7-11.*

Installation of the Fuel Injectors

2-Valve Cylinder Head

1. Reinsert a new nozzle seat **(Figure 7-59,** (4)) and nozzle protector **(Figure 7-59,** (3)) in the cylinder head for each injector.
2. Reinstall a O-ring on to each injector body.
3. Reinsert each fuel injector into the cylinder head.
4. Reinstall the fuel injector retainers **(Figure 7-59,** (2)) and torque the retaining bolts to specification.
5. Reinstall the fuel return hoses **(Figure 7-59,** (1)), one on each side of each injector.
6. Reinstall the fuel high-pressure fuel line assembly and tighten the nuts using a “line” or “flare nut” wrench.

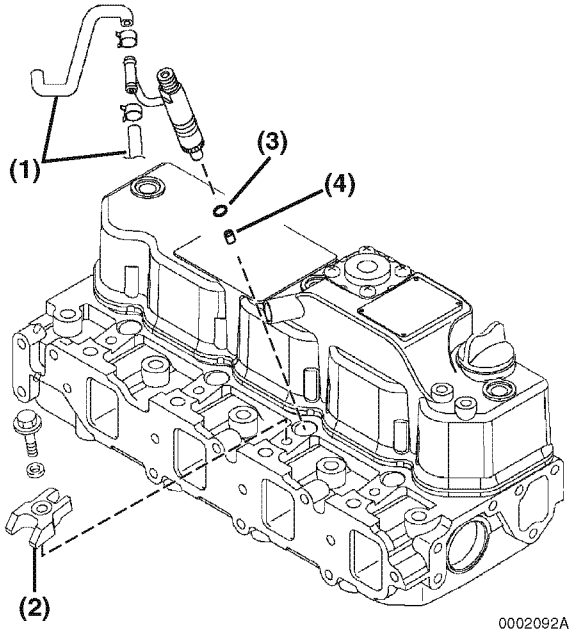

Figure 7-59

7. Prime the fuel system. *See Priming the Fuel System on page 4-15.*
8. Operate the engine and check for fuel and coolant leaks.

4-Valve Cylinder Head

1. Reinsert a new nozzle seat **(Figure 7-60,** (6)) and nozzle protector **(Figure 7-60,** (5)) in the cylinder head for each injector.
2. Reinstall a O-ring on to each injector body.
3. Reinsert each fuel injector **(Figure 7-60,** (4)) into the cylinder head.
4. Reinstall the fuel injector retainers **(Figure 7-60,** (3)) and torque the retaining bolts **(Figure 7-60,** (2)) to specification.
5. Reinstall the fuel injector return line assembly using new gaskets on each side of the injector line screws.
6. Reinstall the fuel high-pressure fuel lines to each injector and tighten the nuts using a “line” or “flare nut” wrench.

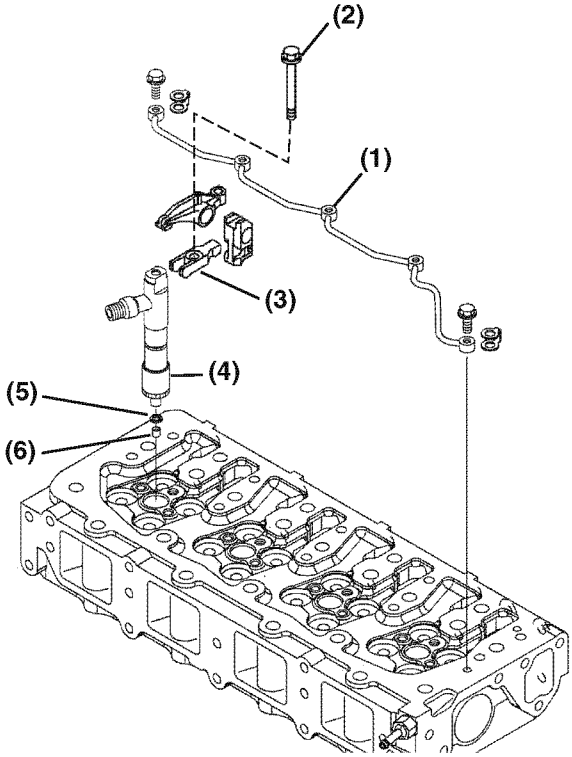

Figure 7-60

7. Prime the fuel system. *See Priming the Fuel System on page 4-15.*
8. Operate the engine and check for fuel and coolant leaks.

Fuel injection system (for a four-valve cylinder head)

The fuel injection system for a four-valve cylinder head is different, not only in the nozzle valve specifications, but also in the nozzle holder specifications. Therefore, it is marked as follows; take care not to install a wrong part when replacing it with new one.

Identifying the fuel injector assembly

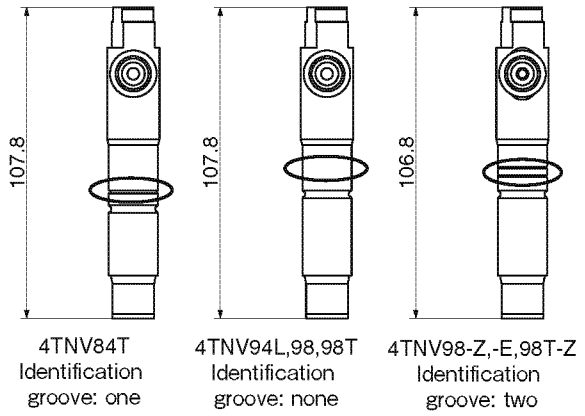

Figure 7-61

This Page Intentionally Left Blank

Section 8

COOLING SYSTEM

Page

Before You Begin Servicing 8-3
Introduction 8-6
Cooling System Diagram 8-6
Engine Coolant Pump Components 8-7
Engine Coolant System Check 8-8
Engine Coolant Pump 8-8
- Removal of Engine Coolant Pump 8-8
- Disassembly of Engine Coolant Pump 8-10
- Cleaning and Inspection 8-10
- Reassembly of Engine Coolant Pump 8-11
- Installation of Engine Coolant Pump 8-12

This Page Intentionally Left Blank

BEFORE YOU BEGIN SERVICING

DANGER

SCALD HAZARD!

- NEVER remove the radiator cap if the engine is hot. Steam and hot engine coolant will spurt out and seriously burn you. Allow the engine to cool down before you attempt to remove the radiator cap.
- Tighten the radiator cap securely after you check the radiator. Steam can spurt out during engine operation if the cap is loose.
- ALWAYS check the level of the engine coolant by observing the reserve tank.
- Failure to comply will result in death or serious injury.

0000002en

WARNING

BURN HAZARD!

- Wait until the engine cools before you drain the engine coolant. Hot engine coolant may splash and burn you.
- Failure to comply could result in death or serious injury.

0000016en

WARNING

ENTANGLEMENT HAZARD!

- Stop the engine before you begin to service it.
- NEVER leave the key in the key switch when you are servicing the engine. Someone may accidentally start the engine and not realize you are servicing it. This could result in a serious injury.
- If you must service the engine while it is operating, remove all jewelry, tie back long hair, and keep your hands, other body parts and clothing away from moving / rotating parts.
- Failure to comply could result in death or serious injury.

0000010en

WARNING

FUME / BURN HAZARD!

- Always read and follow safety related precautions found on containers of hazardous substances like parts cleaners, primers, sealants and sealant removers.
- Failure to comply could result in death or serious injury.

0000014en

⚠ WARNING

BURN HAZARD!

- If you must drain the engine oil while it is still hot, stay clear of the hot engine oil to avoid being burned.
- ALWAYS wear eye protection.
- Failure to comply could result in death or serious injury.

0000011en

⚠ CAUTION

FLYING OBJECT HAZARD!

- ALWAYS wear eye protection when servicing the engine and when using compressed air or high-pressure water. Dust, flying debris, compressed air, pressurized water or steam may injure your eyes.
- Failure to comply may result in minor or moderate injury.

0000003en

⚠ CAUTION

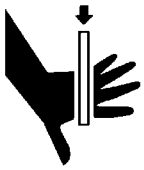

PINCH HAZARD!

Carefully rotate the alternator toward the cylinder block while loosening the V-belt. Failure to comply may result in minor or moderate injury.

0000014en

CAUTION

- Only use the engine coolant specified. Other engine coolants may affect warranty coverage, cause an internal buildup of rust and scale and / or shorten engine life.
- Prevent dirt and debris from contaminating the engine coolant. Carefully clean the radiator cap and the surrounding area before you remove the cap.
- NEVER mix different types of engine coolants. This may adversely affect the properties of the engine coolant.

0000006en

CAUTION

If the engine coolant pump must be replaced, replace the engine coolant pump as an assembly only. Do not attempt to repair the engine coolant pump or replace individual components.

0000041en

CAUTION

Use a new special O-ring between the engine coolant pump and the joint. Be sure to use the special O-ring for each engine model. Although the O-ring dimensions are the same as a commercially available O-ring, the material is different.

0000042en

INTRODUCTION

This section of the *Service Manual* describes the procedures necessary to service the 4TNV84 engine coolant pump. This engine coolant pump is representative of the coolant pumps used on other TNV model engines. For specific part detail, see the parts catalog for the engine you are working on.

COOLING SYSTEM DIAGRAM

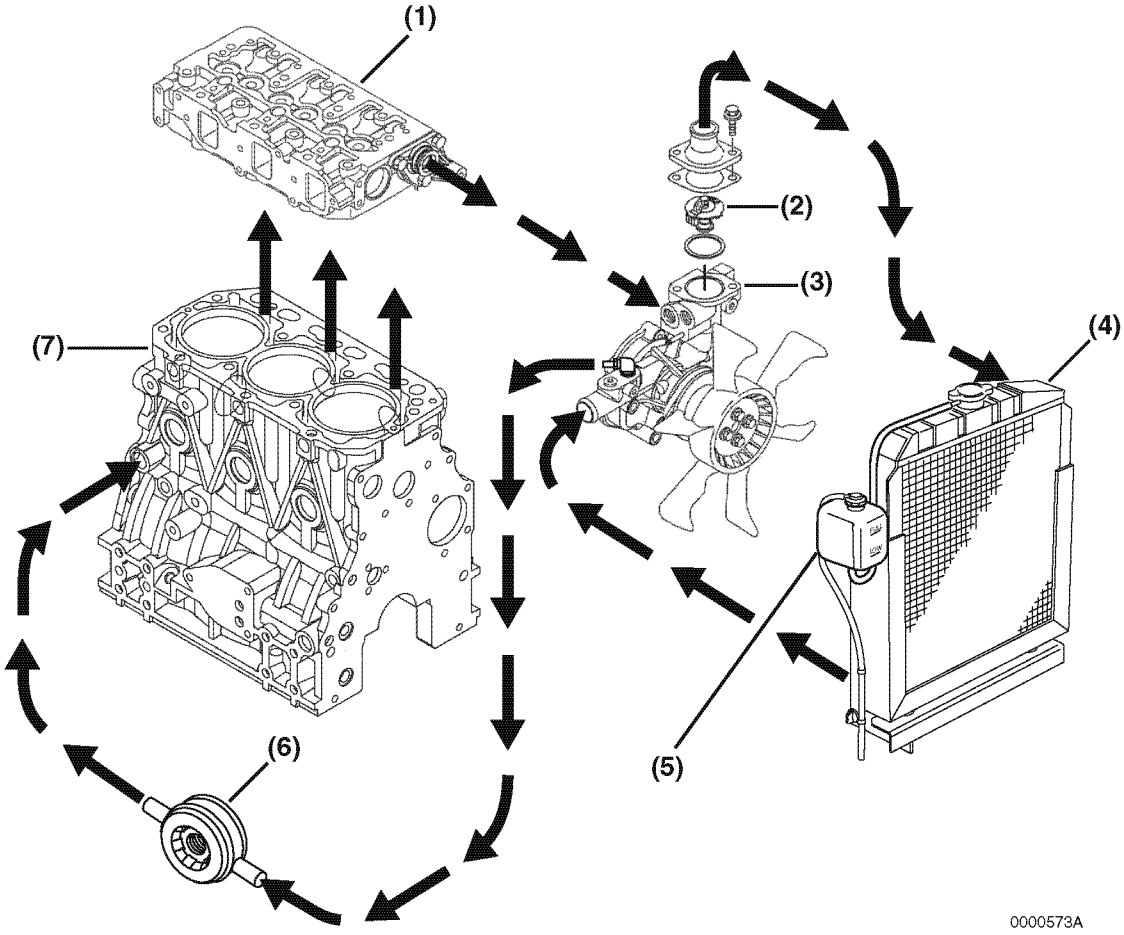

1 – Cylinder Head
2 – Thermostat
3 – Engine Coolant Pump
4 – Radiator
5 – Coolant Recovery Tank
6 – Engine Oil Cooler*
7 – Cylinder Block

* Not standard on all models.

Figure 8-1

ENGINE COOLANT PUMP COMPONENTS

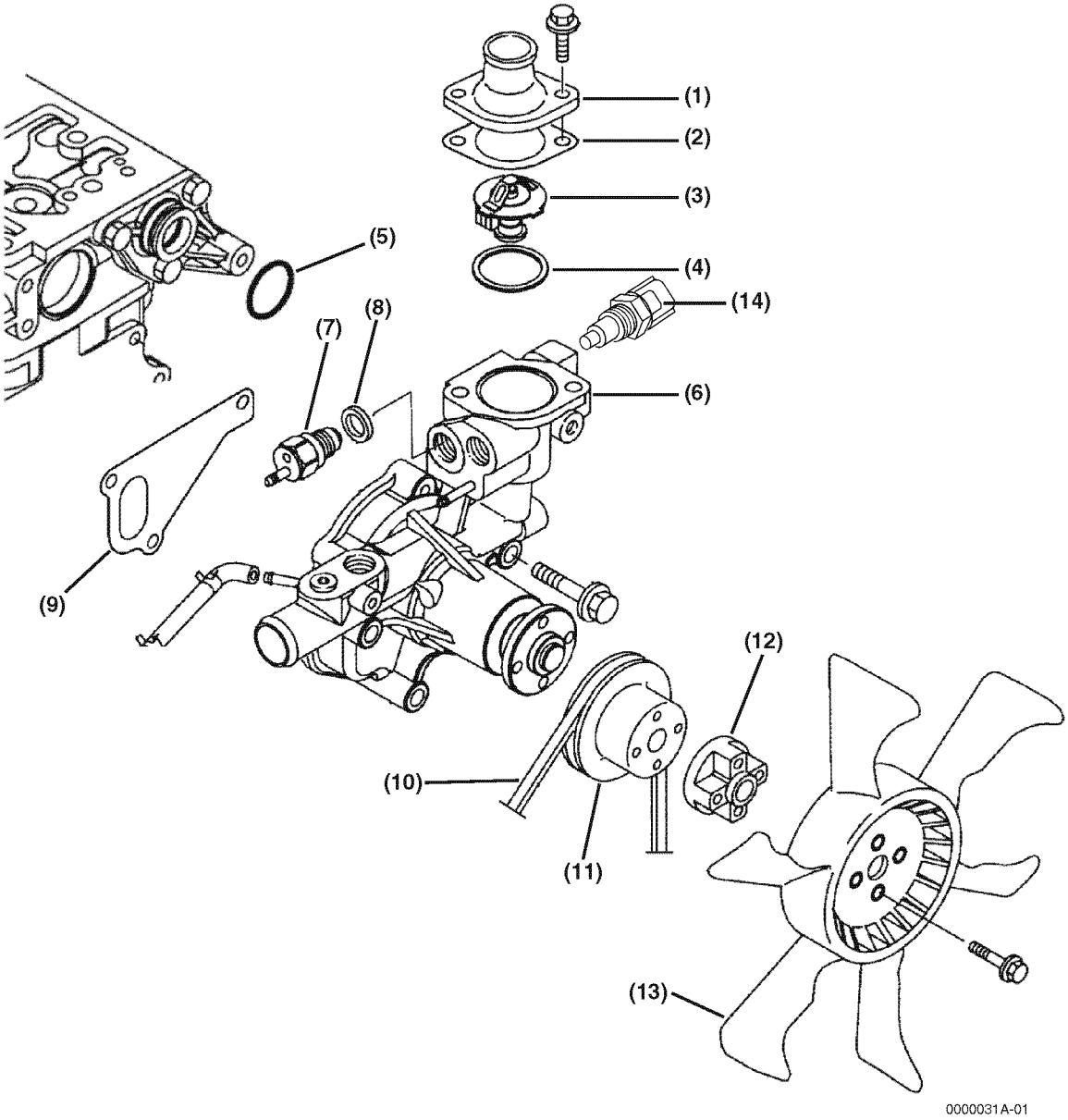

1 – Thermostat Cover
2 – Thermostat Cover Gasket
3 – Thermostat
4 – Thermostat O-Ring
5 – Special O-Ring
6 – Engine Coolant Pump
7 – Temperature Switch
8 – Gasket
9 – Engine Coolant Pump Gasket
10 – V-Belt
11 – Engine Coolant Pump V-Pulley
12 – Spacer
13 – Engine Coolant Fan
14 – Water temperature sensor (Electronically controlled engine)

Figure 8-2

ENGINE COOLANT SYSTEM CHECK

Check the engine coolant system for leakage.

1. With the radiator properly filled, install a cooling system tester **(Figure 8-3, (1))**.

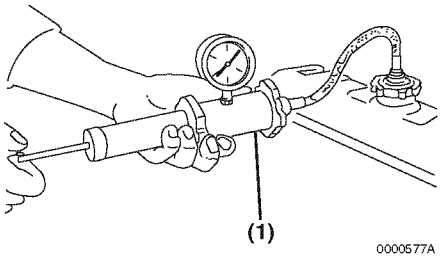

Figure 8-3

2. Apply 10.8 - 14.8 psi (75 - 105 kPa; 0.75 - 1.05 kgf/cm²) to the cooling system. If the pressure reading drops, the engine coolant system is leaking. Identify the source of the leak and repair it.

ENGINE COOLANT PUMP

Removal of Engine Coolant Pump

Verify the condition of the engine coolant pump before disassembling it from the engine. Check the engine coolant pump shaft bearing for abnormal noise, sticking, excessive play and water leakage. Replace the coolant pump if any of these conditions are present.

CAUTION

If the engine coolant pump must be replaced, replace the engine coolant pump as an assembly only. Do not attempt to repair the engine coolant pump or replace individual components.

0000041en

IMPORTANT

Make sure the engine and engine coolant are not hot.

1. Before removing the engine coolant pump or thermostat, it will be necessary to drain the engine coolant. Drain the coolant into a clean container if the coolant is to be reused. Otherwise, properly dispose of the coolant.
2. Remove the radiator cap **(Figure 8-4, (1))**.
3. Remove the drain plug or open the drain cock **(Figure 8-4, (1))** at the lower portion of the radiator and drain the coolant.

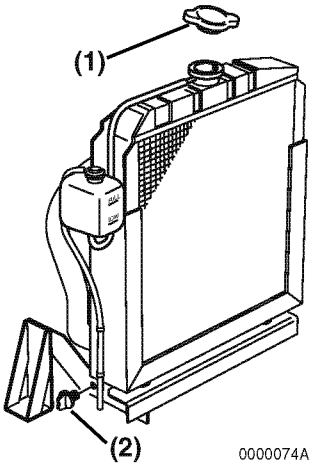

Figure 8-4

4. Drain the coolant from the engine block.
   - On models equipped with an oil cooler, remove the coolant hose **(Figure 8-5, (1))** at the oil cooler.

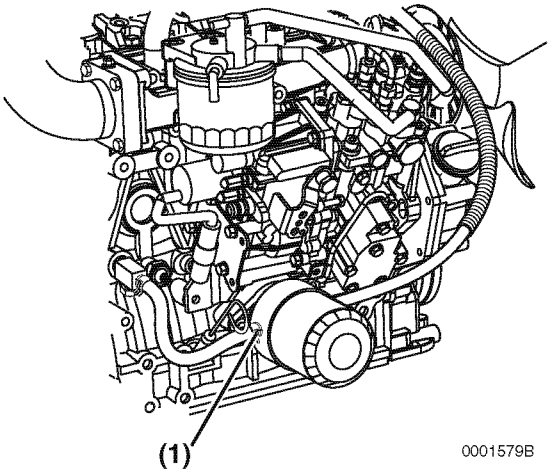

Figure 8-5

- On models not equipped with an oil cooler, remove the coolant drain plug **(Figure 8-6, (1))** from the engine block.

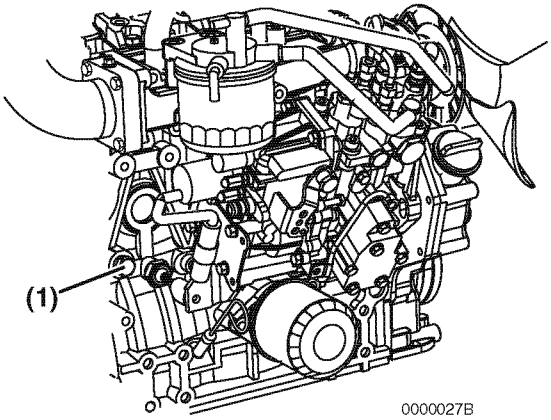

Figure 8-6

5. Loosen the alternator mounting bolts. Loosen and remove the V-belt and rotate the alternator away from the engine and out of the way.

⚠ CAUTION

PINCH HAZARD!

Carefully rotate the alternator toward the cylinder block while loosening the V-belt. Failure to comply may result in minor or moderate injury.

0000014en

6. Remove the engine coolant fan guard (if equipped), engine coolant fan **(Figure 8-7, (1))**, spacer **(Figure 8-7, (2))** and engine coolant pump V-pulley **(Figure 8-7, (3))**.

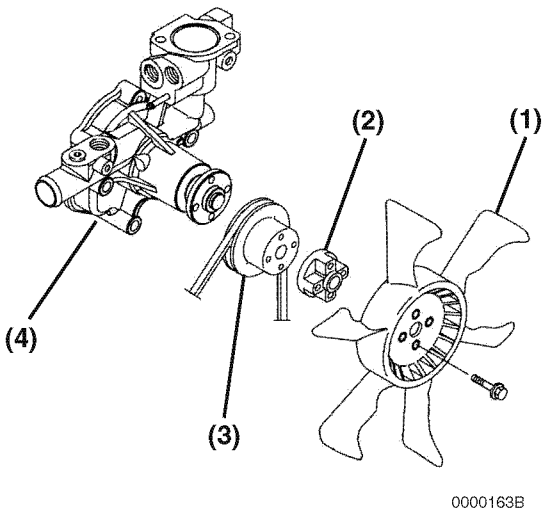

Figure 8-7

7. Disconnect the coolant hoses and the temperature switch lead wire from the engine coolant pump.
8. Remove the engine coolant pump **(Figure 8-7, (4))**. Discard the gasket.

Disassembly of Engine Coolant Pump

1. Remove the thermostat cover **(Figure 8-8, (1))**. Discard the gasket.

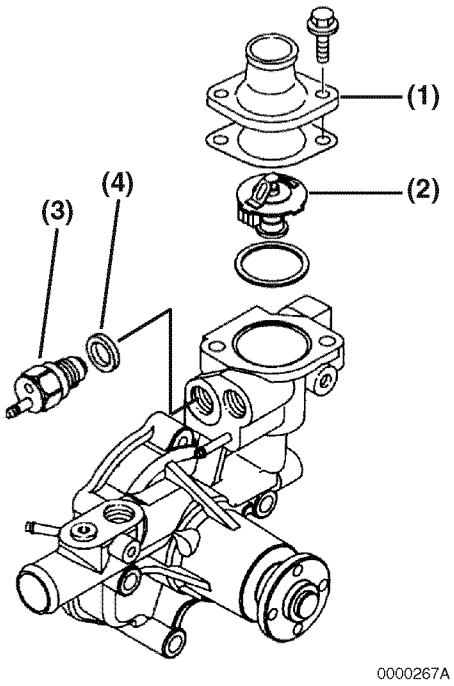

Figure 8-8

2. Remove the thermostat **(Figure 8-8, (2))**. Discard the O-ring. Remove the temperature switch **(Figure 8-8, (3))** and gasket **(Figure 8-8, (4))**. Discard the gasket.

Cleaning and Inspection

Temperature Switch

1. Check for proper operation of the temperature switch. Connect a continuity light or ohmmeter to the temperature switch. Connect one lead to the terminal of the switch **(Figure 8-9, (1))** and the other lead to the metal portion of the switch **(Figure 8-9, (2))**.

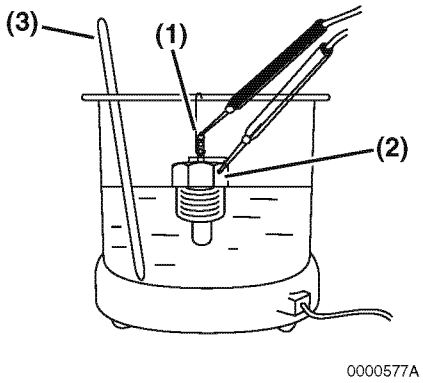

Figure 8-9

2. Place the temperature switch and an accurate thermometer **(Figure 8-9, (3))** in engine coolant.
3. Slowly increase temperature of the fluid using an external heat source.
4. The temperature switch is operating properly if the continuity light or ohmmeter indicates continuity when the fluid temperature reaches 225°F - 235°F (107°C - 113°C).

Water temperature sensor

1. Inspect the water temperature sensor to make sure that it is properly operating. As shown in the following figure, connect an electric resistor to the coupler of the water temperature sensor **(Figure 8-10, (1))**.

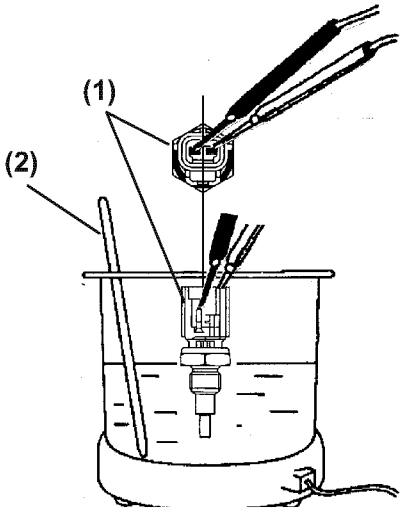

Figure 8-10

2. Dip the water temperature sensor and an accurate thermometer **(Figure 8-10, (2))** into the cooling water.
3. Measure the electric resistance value while slowly raising the cooling water temperature using an external heat source.
4. The resistance value at each of the following temperatures is within the permissible range specified, the water temperature sensor is correctly operating.

Cooling water temperature (°C)	Resistance (kΩ)
20	$2.45^{+0.14}_{-0.13}$
80	0.318 ± 0.008
100	(0.1836)

Thermostat

1. Check for proper operation of the thermostat. Place the thermostat **(Figure 8-11, (1))** and an accurate thermometer **(Figure 8-11, (2))** in warm water.

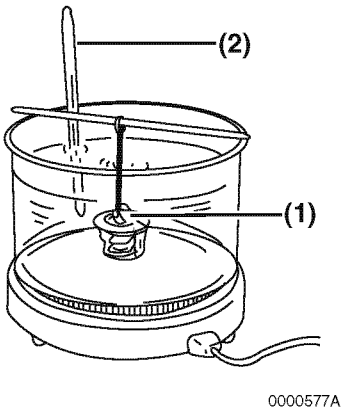

Figure 8-11

2. Slowly increase the temperature of the water using an external heat source.
3. The thermostat is operating properly if it starts to open at the temperature value stamped on the flange of the thermostat, and fully opens as the temperature of the water is increased.

Radiator Cap

1. Check for proper operation of the radiator cap. Install the radiator cap **(Figure 8-12, (1))** on a cooling system tester.

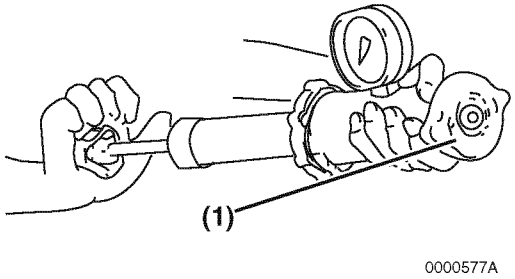

Figure 8-12

2. Apply 10.8 - 14.8 psi (75 - 105 kPa; 0.75 - 1.05 kgf/cm²) to the radiator cap. The radiator cap relief valve must open within the specified range.

Reassembly of Engine Coolant Pump

1. Reinstall the thermostat **(Figure 8-13, (1))** and a new O-ring.

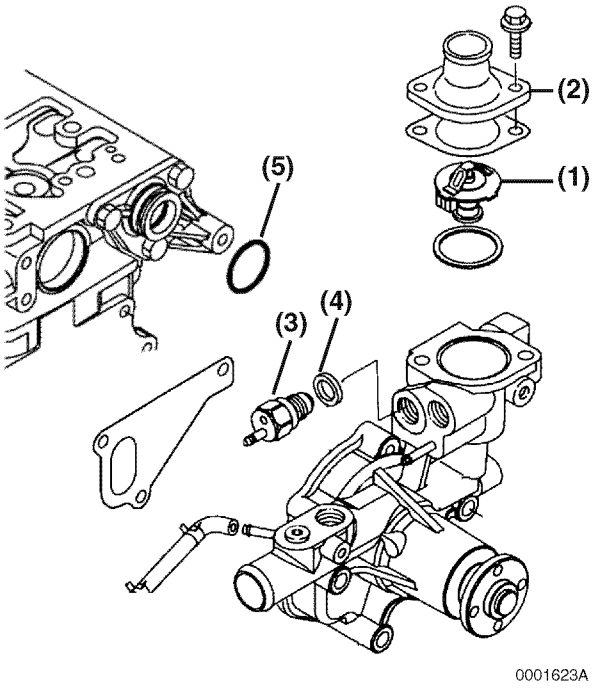

Figure 8-13

2. Reinstall the thermostat cover **(Figure 8-13, (2))** and a new gasket. Tighten the thermostat cover bolts.
3. Reinstall the temperature switch **(Figure 8-13, (3))** and a new gasket **(Figure 8-13, (4))**.

Installation of Engine Coolant Pump

1. Position the engine coolant pump on the engine and install a new gasket. Install a new special O-ring **(Figure 8-13, (5))** on assembly between the engine coolant pump and the joint.

CAUTION

Use a new special O-ring between the engine coolant pump and the joint. Be sure to use the special O-ring for each engine model. Although the O-ring dimensions are the same as a commercially available O-ring, the material is different.

0000042en

2. Reinstall the engine coolant pump bolts. Tighten the bolts.
3. Inspect and reinstall the coolant hoses and the temperature switch lead wire.
4. Reinstall the engine coolant pump V-pulley **(Figure 8-14, (1))**, spacer **(Figure 8-14, (2))** engine coolant fan **(Figure 8-14, (3))** and engine coolant fan guard (if equipped).

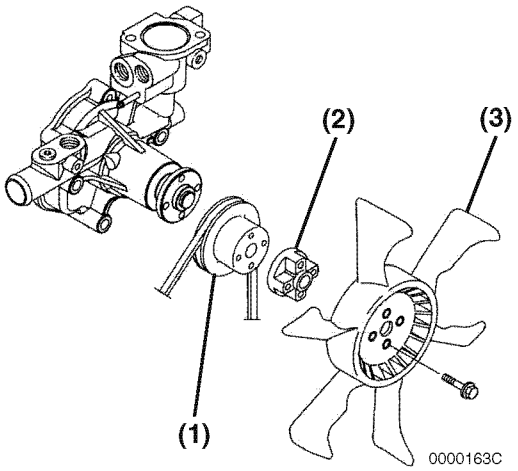

Figure 8-14

5. Inspect the condition of the V-belt. There must be clearance **(Figure 8-15, (1))** between the V-belt and the bottom of the pulley groove. If there is no clearance **(Figure 8-15, (2))** between the V-belt and the bottom of the pulley groove, replace the V-belt.

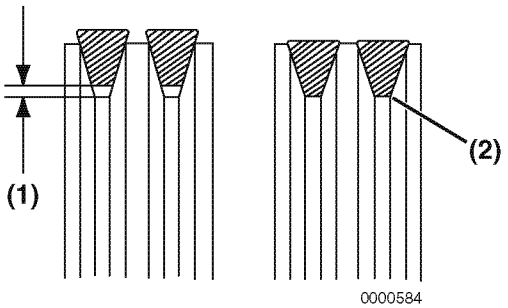

Figure 8-15

6. Reinstall the V-belt. Tighten the V-belt to the proper tension. *See Check and Adjust Cooling Fan V-Belt on page 5-30.*
7. Reinstall and tighten the drain plug or close the drain cock in the radiator. Reinstall and tighten the engine block drain plug or reconnect the coolant hose at the oil cooler.
8. Fill the radiator and engine with engine coolant. *See Drain, Flush and Refill Cooling System With New Coolant on page 5-36.*

CAUTION

- **Only use the engine coolant specified. Other engine coolants may affect warranty coverage, cause an internal buildup of rust and scale and / or shorten engine life.**
- **Prevent dirt and debris from contaminating the engine coolant. Carefully clean the radiator cap and the surrounding area before you remove the cap.**
- **NEVER mix different types of engine coolants. This may adversely affect the properties of the engine coolant.**

0000006en

This Page Intentionally Left Blank

Section 9

LUBRICATION SYSTEM

Page

Before You Begin Servicing 9-3
Introduction 9-5
Oil Pump Service Information 9-5
Lubrication System Diagram 9-8
Checking Engine Oil Pressure 9-9
Trochoid Oil Pump 9-9
- 3TNV82A to 4TNV88 Oil Pump Components 9-9
- Disassembly of Oil Pump 9-10
- Cleaning and Inspection 9-11
- Reassembly of Oil Pump 9-12

Trochoid Oil Pump 9-13
- 3TNV82A-B, 3TNV88-B, 3TNV88-U, 4TNV88-B4TNV88-U, 3TNV84T-Z, 4TNV84T-Z Oil Pump Components 9-13
- Disassembly of Oil Pump 9-14
- Cleaning and inspection 9-14
- Reassembly of Oil Pump 9-16

Trochoid Oil Pump 9-17
- 4TNV94L/98/106 Oil Pump Components 9-17
- Disassembly of Oil Pump 9-17
- Cleaning and Inspection 9-18
- Reassembly of Oil Pump 9-19

This Page Intentionally Left Blank

BEFORE YOU BEGIN SERVICING

⚠ WARNING

ENTANGLEMENT HAZARD!

- Stop the engine before you begin to service it.
- NEVER leave the key in the key switch when you are servicing the engine. Someone may accidentally start the engine and not realize you are servicing it. This could result in a serious injury.
- If you must service the engine while it is operating, remove all jewelry, tie back long hair, and keep your hands, other body parts and clothing away from moving / rotating parts.
- Failure to comply could result in death or serious injury.

0000010en

⚠ WARNING

BURN HAZARD!

- Keep your hands and other body parts away from hot engine surfaces such as the muffler, exhaust pipe, turbocharger (if equipped) and engine block during operation and shortly after you shut the engine down. These surfaces are extremely hot while the engine is operating and could seriously burn you.
- Failure to comply could result in death or serious injury.

0000015en

⚠ WARNING

FUME / BURN HAZARD!

- Always read and follow safety related precautions found on containers of hazardous substances like parts cleaners, primers, sealants and sealant removers.
- Failure to comply could result in death or serious injury.

0000014en

⚠ CAUTION

FLYING OBJECT HAZARD!

- ALWAYS wear eye protection when servicing the engine and when using compressed air or high-pressure water. Dust, flying debris, compressed air, pressurized water or steam may injure your eyes.
- Failure to comply may result in minor or moderate injury.

0000003en

⚠ CAUTION

If any oil pump component clearance exceeds its limit, the oil pump must be replaced as an assembly.

0000015en

CAUTION

- Only use the engine oil specified. Other engine oils may affect warranty coverage, cause internal engine components to seize and / or shorten engine life.
- Prevent dirt and debris from contaminating the engine oil. Carefully clean the oil cap / dipstick and the surrounding area before you remove the cap.
- NEVER mix different types of engine oil. This may adversely affect the lubricating properties of the engine oil.
- NEVER overfill. Overfilling may result in white exhaust smoke, engine overspeed or internal damage.

0000005en

CAUTION

If the oil pump must be replaced, replace it as an assembly only. Do not replace individual components.

0000030en

INTRODUCTION

This section of the *Service Manual* describes the procedures necessary to service the 3TNV82A to 4TNV88, and 4TNV94L/98/106 Trochoid oil pumps.

See Replace Engine Oil and Engine Oil Filter on page 5-28 for engine oil and engine oil filter replacement procedures.

OIL PUMP SERVICE INFORMATION

Engine Oil Pressure

<table>
<tr><th rowspan="2">Model</th><th colspan="6">At Rated Engine RPM</th><th rowspan="2">At Low Idle Speed</th></tr>
<tr><th>1500 - 1800 min^{-1}</th><th>2000 - 2500 min^{-1}</th><th>2600 min^{-1}</th><th>2700 min^{-1}</th><th>2800 min^{-1}</th><th>2900 - 3000 min^{-1}</th></tr>
<tr><td>3TNV82A</td><td colspan="4">0.34 - 0.49MPa
(3.5 - 5.0kgf/cm^2)</td><td colspan="2">0.39 - 0.54MPa
(4.0 - 5.5kgf/cm^2)</td><td rowspan="9">0.06MPa
(0.6kgf/cm^2)
or greater</td></tr>
<tr><td>3TNV82A-B</td><td>-</td><td colspan="4">0.31 - 0.46MPa
(3.2 - 4.7kgf/cm^2)</td><td>0.36 - 0.51MPa
(3.7 - 5.2kgf/cm^2)</td></tr>
<tr><td>3TNV84
3TNV88
4TNV84
4TNV88</td><td>0.34 - 0.49MPa
(3.5 - 5.0kgf/cm^2)</td><td colspan="5">0.39 - 0.54MPa
(4.0 - 5.5kgf/cm^2)</td></tr>
<tr><td>3TNV88-B
3TNV88-U</td><td>0.29 - 0.44MPa
(3.0 - 4.5kgf/cm^2)</td><td colspan="4">0.34 - 0.49MPa
(3.5 - 5.0kgf/cm^2)</td><td>0.39 - 0.54MPa
(4.0 - 5.5kgf/cm^2)</td></tr>
<tr><td>4TNV88-B
4TNV88-U</td><td>0.29 - 0.44MPa
(3.0 - 4.5kgf/cm^2)</td><td colspan="5">0.32 - 0.47MPa
(3.3 - 4.8kgf/cm^2)</td></tr>
<tr><td>3TNV84T
3TNV84T-Z</td><td>0.29 - 0.44MPa
(3.0 - 4.5kgf/cm^2)</td><td colspan="2">0.34 - 0.49MPa
(3.5 - 5.0kgf/cm^2)</td><td colspan="3">0.39 - 0.54MPa
(4.0 - 5.5kgf/cm^2)</td></tr>
<tr><td>4TNV84T
4TNV84T-Z</td><td>0.29 - 0.44MPa
(3.0 - 4.5kgf/cm^2)</td><td colspan="5">0.36 - 0.51MPa
(3.7 - 5.2kgf/cm^2)</td></tr>
<tr><td>4TNV94L
4TNV98
4TNV98-Z
4TNV98-E
4TNV98T
4TNV98T-Z</td><td colspan="6">0.29 - 0.39MPa
(3.0 - 4.0kgf/cm^2)</td></tr>
<tr><td>4TNV106
4TNV106T</td><td>0.31 - 0.49MPa
(3.2 - 5.0kgf/cm^2)</td><td colspan="5">With balancer:
0.34 - 0.44MPa
(3.5 - 4.5kgf/cm^2)
Without balancer:
0.39 - 0.49MPa
(4.0 - 5.0kgf/cm^2)</td></tr>
</table>

Outer Rotor Outside Clearance

Model	Standard	Limit	Reference Page
3TNV82A, 3TNV84, 3TNV84T 3TNV88, 4TNV84, 4TNV88, 4TNV84T	0.0047 - 0.0083 in. (0.12 - 0.21 mm)	0.0118 in. (0.30 mm)	Check Outer Rotor Outside Clearance on page 9-11
3TNV82A-B 3TNV88-B, 3TNV88-U 4TNV88-B, 4TNV88-U 3TNV84T-Z, 4TNV84T-Z	0.0035 - 0.0063 in. (0.09 - 0.16 mm)	0.0098 in. (0.25 mm)	Check Outer Rotor Outside Clearance on page 9-14
4TNV94L, 4TNV98, 4TNV98T 4TNV98-Z, 4TNV98-E 4TNV98T-Z	0.0039 - 0.0061 in. (0.100 - 0.155 mm)	0.0098 in. (0.25 mm)	Check Outer Rotor Outside Clearance on page 9-18
4TNV106, 4TNV106T	0.0039 - 0.0065 in. (0.100 - 0.165 mm)	0.0098 in. (0.25 mm)	

Outer Rotor Side Clearance

Model	Standard	Limit	Reference Page
3TNV82A, 3TNV84, 3TNV84T 3TNV88, 4TNV84, 4TNV88, 4TNV84T	0.0008 - 0.0028 in. (0.02 - 0.07 mm)	0.0047 in. (0.12 mm)	Check Outer Rotor Side Clearance on page 9-12
3TNV82A-B 3TNV88-B, 3TNV88-U 4TNV88-B, 4TNV88-U 3TNV84T-Z, 4TNV84T-Z	0.0020 - 0.0039 in. (0.05 - 0.10 mm)	0.0059 in. (0.15 mm)	Check Outer Rotor Side Clearance on page 9-15
4TNV94L, 4TNV98, 4TNV98T 4TNV98-Z, 4TNV98-E 4TNV98T-Z	0.0020 - 0.0039 in. (0.05 - 0.10 mm)	0.0059 in. (0.15 mm)	Check Outer Rotor Side Clearance on page 9-18
4TNV106, 4TNV106T	0.0012 - 0.0047 in. (0.03 - 0.12 mm)	0.0067 in. (0.17 mm)	

Outer Rotor to Inner Rotor Tip Clearance

Model	Standard	Limit	Reference Page
3TNV82A, 3TNV84, 3TNV84T 3TNV88, 4TNV84, 4TNV88, 4TNV84T	-	0.0063 in. (0.16 mm)	Outer Rotor to Inner Rotor Tip Clearance on page 9-11
3TNV82A-B 3TNV88-B, 3TNV88-U 4TNV88-B, 4TNV88-U 3TNV84T-Z, 4TNV84T-Z	-	0.0063 in. (0.16 mm)	Outer Rotor to Inner Rotor Tip Clearance on page 9-15
4TNV94L, 4TNV98, 4TNV98T 4TNV98-Z, 4TNV98-E 4TNV98T-Z	-	0.0063 in. (0.16 mm)	Outer Rotor to Inner Rotor Tip Clearance on page 9-18
4TNV106, 4TNV106T	-	0.0063 in. (0.16 mm)	

Inner Rotor and Gear Boss Clearance
<Multiple tooth trochoid type 3TNV82A - 4TNV88>

Item	Parts	Standard Dimension	Standard Clearance	Standard Clearance Limit	Reference Page
Inside Clearance of Inner Rotor	Gear Boss Diameter	2.0886 - 2.0925 in. (53.05 - 53.15 mm)	0.012 - 0.020 in. (0.3 - 0.5 mm)	0.024 in. (0.6 mm)	Check Inner Rotor and Gear Boss Clearance on page 9-12
	Rotor Diameter	2.1043 - 2.1083 in. (53.45 - 53.55 mm)			
Inner Rotor Width Across Flat Clearance	Width Across Flat of Gear Boss	1.9468 - 1.9587 in. (49.45 - 49.75mm)	0.008 - 0.020 in. (0.2 - 0.5 mm)	0.028 in. (0.7 mm)	
	Width Across Flat of Rotor	1.9665 - 1.9705 in. (49.95 - 50.05 mm)			

Rotor Shaft Clearance
<Trochoid type 3TNV82A-B - 4TNV88-B, 4TNV94L - 4TNV106T>

Model	Inspection Item	Standard	Limit	Reference Page
3TNV82A-B 3TNV88-B, 3TNV88-U 4TNV88-B, 4TNV88-U 3TNV84T-Z, 4TNV84T-Z	ÉvÉåÅ[ÉgéðéÛì‡åa	0.3937 - 0.3943 in. (10.000 - 10.015 mm)	0.3953 in. (10.040 mm)	Check Rotor Shaft Clearance on page 9-15
	Rotor Shaft O.D.	0.3919 - 0.3924 in. (9.955 - 9.967 mm)	0.3913 in. (9.940 mm)	
	Rotor Clearance	0.0013 - 0.0024 in. (0.033 - 0.060 mm)	0.0039 in. (0.100 mm)	
4TNV94L, 4TNV98, 4TNV98T 4TNV98-Z, 4TNV98-E 4TNV98T-Z	ÉMÉÑÉPÅ[ÉXéðéÛì‡åa	0.5110 - 0.5126 in. (12.980 - 13.020 mm)	0.5138 in. (13.050 mm)	Check Rotor Shaft Clearance on page 9-19
	Rotor Shaft O.D.	0.5100 - 0.5104 in. (12.955 - 12.965 mm)	0.5096 in. (12.945 mm)	
	Rotor Clearance	0.0006 - 0.0026 in. (0.015 - 0.065 mm)	0.0041 in. (0.105 mm)	
4TNV106, 4TNV106T	ÉMÉÑÉPÅ[ÉXéðéÛì‡åa	0.5118 - 0.5126 in. (13.000 - 13.020 mm)	0.5138 in. (13.050 mm)	
	Rotor Shaft O.D.	0.5100 - 0.5104 in. (12.955 - 12.965 mm)	0.5096 in. (12.945 mm)	
	Rotor Clearance	0.0014 - 0.0026 in. (0.035 - 0.065 mm)	0.0041 in. (0.105 mm)	

LUBRICATION SYSTEM DIAGRAM

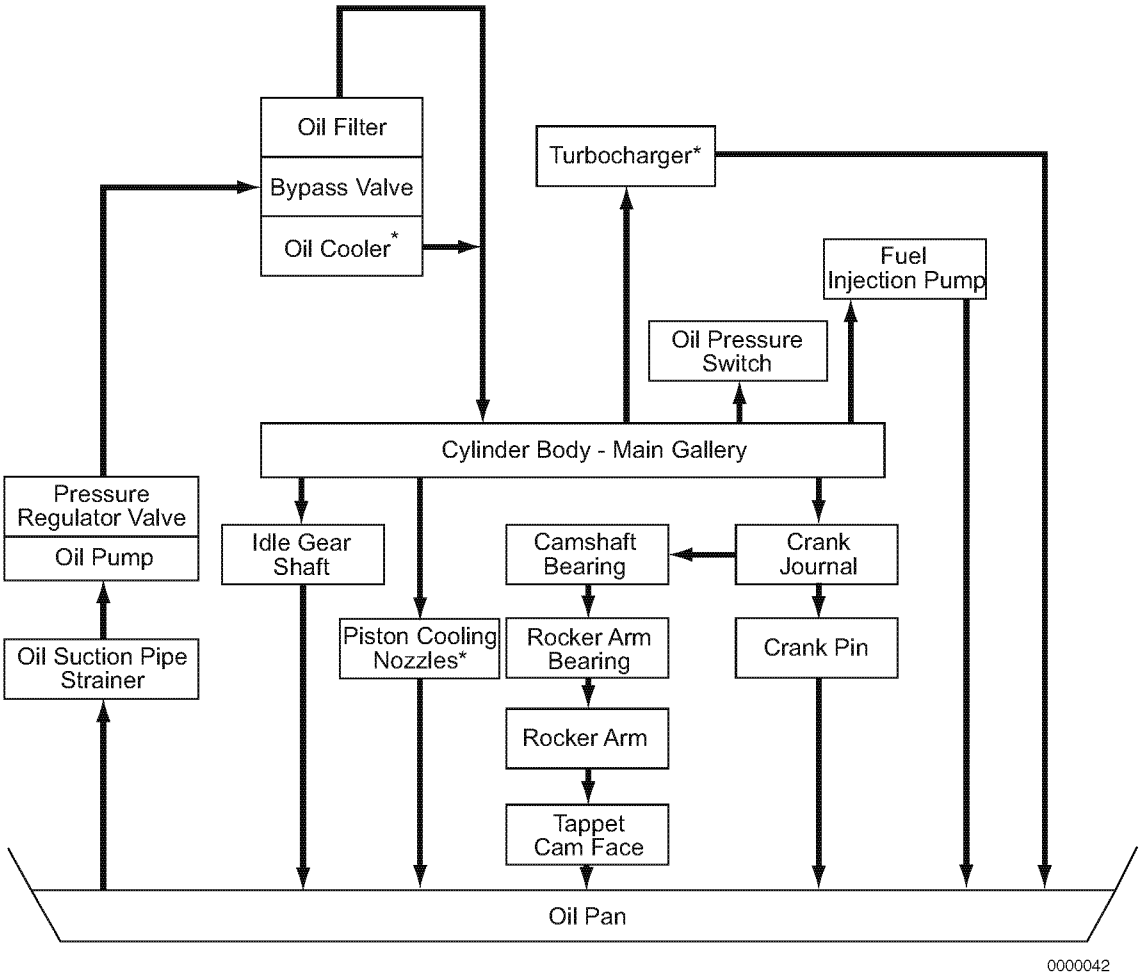

Figure 9-1

Note: Items marked * are not standard equipment on all models.

CHECKING ENGINE OIL PRESSURE

Perform an engine oil pressure check if there is any indication of low oil pressure such as the oil pressure indicator is on or the oil pressure gauge indicates low oil pressure. *See Engine Oil Pressure on page 9-5.*

1. Disconnect the wire lead from the oil pressure switch or sending unit **(Figure 9-2, (1))**.

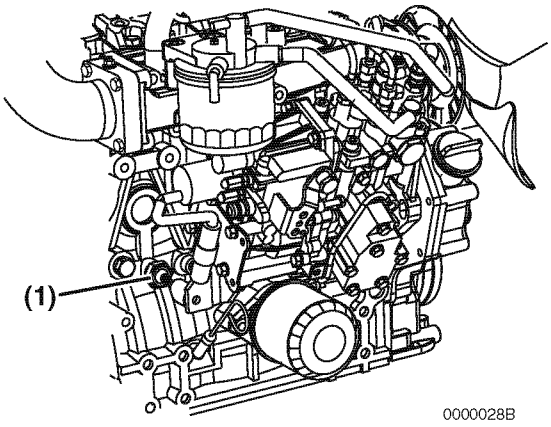

Figure 9-2

2. Remove the oil pressure switch.
3. Install a mechanical oil pressure gauge in the oil pressure switch port.
4. Start the engine:
   - If the mechanical oil pressure test gauge indicates good oil pressure, replace the faulty oil pressure switch or sending unit, or faulty machine oil pressure gauge in instrument panel.
   - If the mechanical oil pressure test gauge indicates low oil pressure, troubleshoot the lubrication system to locate the cause of the low oil pressure. *See Failure Diagnostic List on page 15-9.* Repair as necessary.

TROCHOID OIL PUMP

3TNV82A TO 4TNV88 Oil Pump Components

On these model engines, the oil pump is located inside the front gear case cover and is driven by a boss on the front crankshaft gear. You must remove the front gear case cover to gain access to the oil pump.

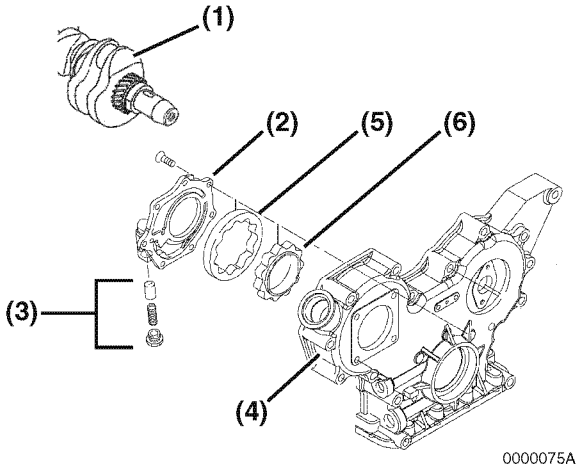

1 – Crankshaft
2 – Oil Pump Cover
3 – Oil Pressure Regulator
4 – Gear Case Cover
5 – Outer Rotor
6 – Inner Rotor

Figure 9-3

Disassembly of Oil Pump

CAUTION

If the oil pump must be replaced, replace it as an assembly only. Do not replace individual components.

0000030en

1. Remove the engine cooling fan guard (if equipped), engine cooling fan **(Figure 9-4, (3))**, spacer **(Figure 9-4, (2))**, engine coolant pump V-pulley **(Figure 9-4, (1))** and V-belt.

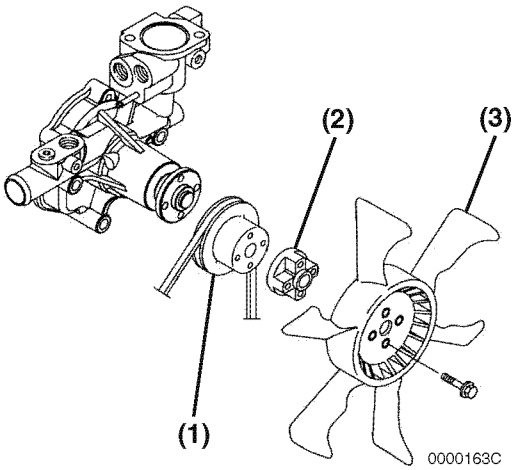

Figure 9-4

2. Remove the crankshaft pulley and gear case cover. *See Removal of Timing Gear Case Cover on page 6-73.*
3. Remove the seven oil pump cover **(Figure 9-5, (1))** screws **(Figure 9-5, (2))**.

Note: The oil pump cover screws are installed using a liquid thread lock. It may be necessary to use a "localized heat" (small propane torch) and an impact-type screwdriver or air tool to remove these screws.

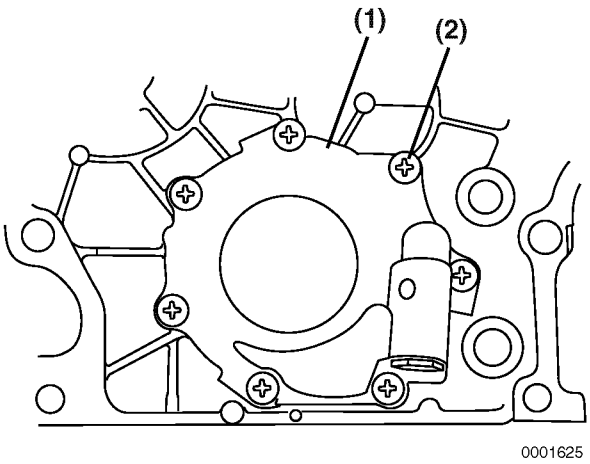

Figure 9-5

4. Remove the oil pump cover **(Figure 9-5, (1))** from the gear case cover.
5. Remove the outer rotor **(Figure 9-6, (2))** and inner rotor **(Figure 9-6, (1))** from the gear case cover.

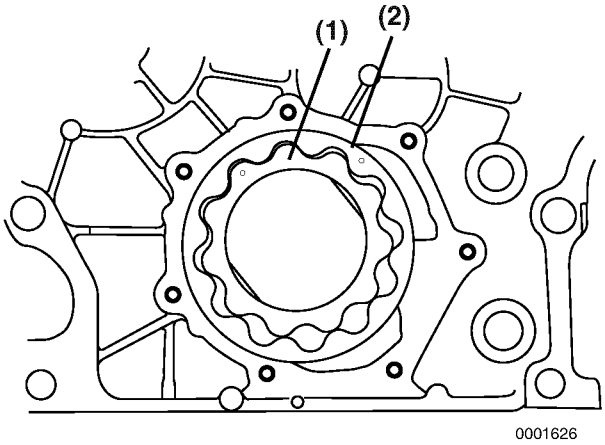

Figure 9-6

6. Remove the oil pressure regulator valve **(Figure 9-7, (1))** from the oil pump cover **(Figure 9-7, (2))**.

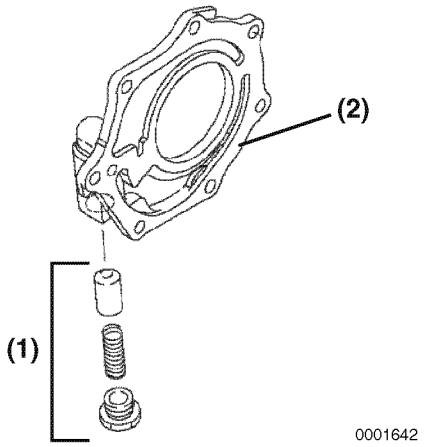

Figure 9-7

Cleaning and Inspection

Wash the oil pump cover, the oil pressure regulator valve, the oil pump cavity and the inner and outer rotors. Inspect the parts for wear or damage. Replace as necessary.

Note: If the oil pump cavity is damaged, the gear case cover must be replaced.

⚠ CAUTION

If any oil pump component clearance exceeds its limit, the oil pump must be replaced as an assembly.

0000015en

Check Outer Rotor Outside Clearance

1. Reinstall the outer and inner rotors. The dots on the rotor faces must face "up." Make sure that the pilot on the back of the inner rotor fits into the bore of the oil pump cavity and the top surface of the inner rotor is flush with the top surface of the outer rotor.
2. Determine the outside clearance of the outer rotor. Insert a feeler gauge between the outer rotor **(Figure 9-8, (1))** and the gear case oil pump cavity **(Figure 9-8, (2))**.

Record the measurement(s) and see Outer Rotor Outside Clearance on page 9-6 for the service limits.

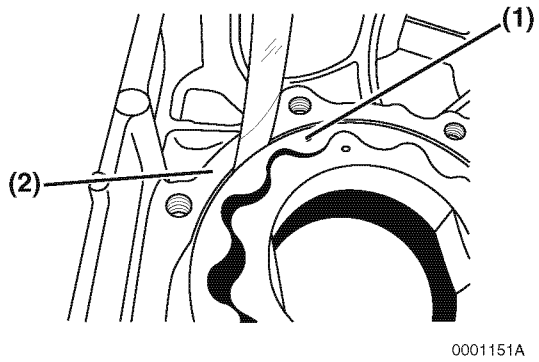

Figure 9-8

Outer Rotor to Inner Rotor Tip Clearance

Determine the outer rotor to inner rotor tip clearance. Insert a feeler gauge between the top of an inner rotor tooth **(Figure 9-9, (1))** and the top of an outer rotor tooth **(Figure 9-9, (2))** and measure the clearance.

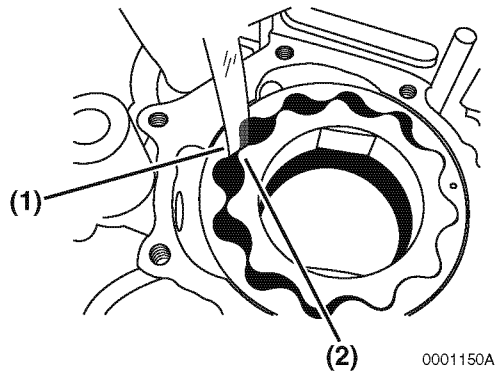

Figure 9-9

Record the measurement(s) and see Outer Rotor to Inner Rotor Tip Clearance on page 9-6 for the service limits.

Check Outer Rotor Side Clearance

Determine the side clearance of the outer rotor across the pump cavity. While pressing down on the outer rotor, measure the depression using a depth micrometer **(Figure 9-10)**.

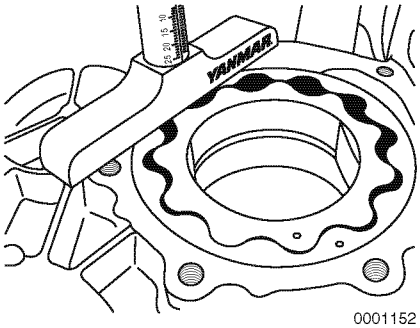

Figure 9-10

Record the measurement(s) and see Outer Rotor Outside Clearance on page 9-6 for the service limits.

Check Inner Rotor and Gear Boss Clearance

Using appropriate measuring instruments, measure the outside dimensions of the crankshaft gear boss and the inside dimensions of the inner rotor **(Figure 9-11)**.

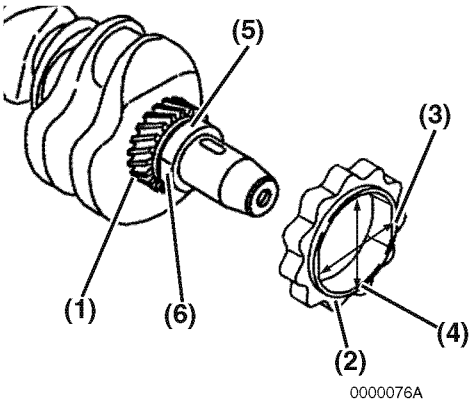

1 – Crank Gear
2 – Inner Rotor
3 – Inside Width Across Flats of Inner Rotor
4 – Overall Inside Diameter of Inner Rotor
5 – Outside Width Across Flats of Gear Boss
6 – Overall Outside Diameter of Gear Boss

Figure 9-11

Record the measurement(s) and see Inner Rotor and Gear Boss Clearance <Multiple tooth trochoid type 3TNV82A - 4TNV88> on page 9-7 for the service limits.

Reassembly of Oil Pump

1. Lubricate the outer rotor **(Figure 9-12, (1))**, inner rotor **(Figure 9-12, (2))** and pump bore in the gear case cover with clean engine oil.

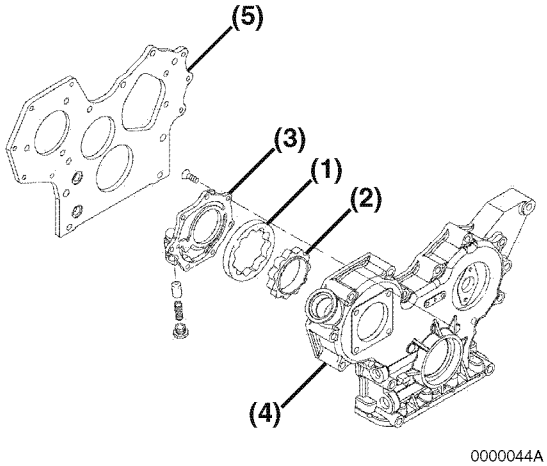

Figure 9-12

2. Reinstall the outer rotor in the gear case. The dot mark on the face of the outer rotor must face up toward the oil pump cover.
3. Reinstall the inner rotor into the gear case cover with the dot mark also facing up. Make sure that the pilot on the back side of the inner rotor fits into the bore in the gear case cover and the top surface of the inner rotor is flush with the top surface of the outer rotor.
4. Reinstall the oil pressure regulator valve into the oil pump cover. Apply LOCTITE® 242 (red) to the valve plug. (Follow LOCTITE package instructions.)
5. Reinstall the oil pump cover **(Figure 9-12, (3))**. Apply LOCTITE 290 (green) or LOCTITE 262 (red) to the oil pump cover screws. (Follow LOCTITE package instructions.) Tighten the pump cover screws to 61 ± 13 in·lb (6.9 ± 1.5 N·m, 0.7 ± 0.15 kgf·m).

6. Reinstall the gear case cover and crankshaft pulley. *See Installation of Gear Case Cover on page 6-97.*
7. Reinstall the engine coolant pump V-pulley **(Figure 9-13, (1))**, spacer **(Figure 9-13, (2))**, engine cooling fan **(Figure 9-13, (3))** and engine cooling fan guard (if equipped).

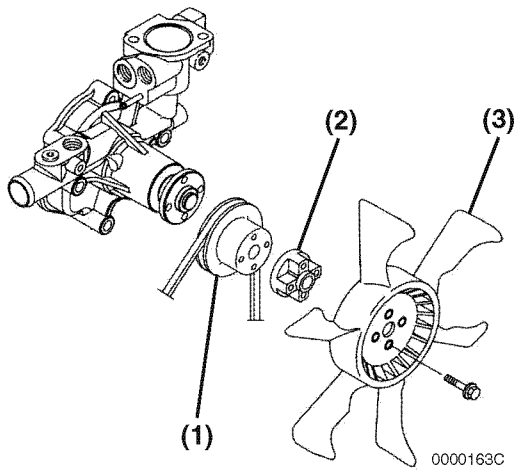

Figure 9-13

8. Reinstall the V-belt. Tighten the V-belt to the proper tension as described in *Check and Adjust Cooling Fan V-Belt on page 5-22.*

TROCHOID OIL PUMP

3TNV82A-B, 3TNV88-B, 3TNV88-U, 4TNV88-B4TNV88-U, 3TNV84T-Z, 4TNV84T-Z Oil Pump Components

The oil pump on these model engines is located in the front gear case and is driven by the same gear train that drives the camshaft and fuel injection pump. You must remove the front gear case cover to gain access to the oil pump.

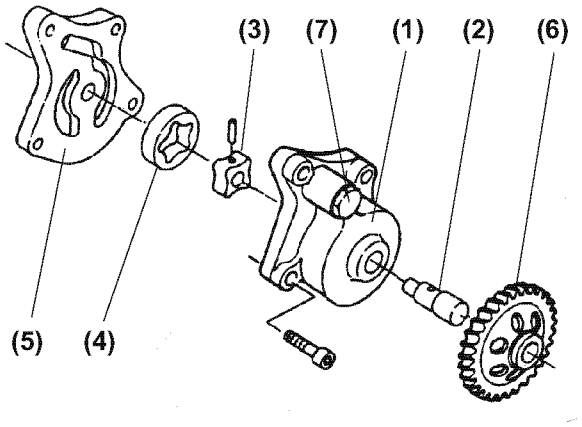

1 – Body
2 – Shaft
3 – Inner rotor
4 – Outer rotor
5 – Cover
6 – Drive gear
7 – Pressure regulator valve

Figure 9-14

Disassembly of Oil Pump

CAUTION

If the oil pump must be replaced, replace it as an assembly only. Do not replace individual components.

0000030en

Remove the cooling water fan guard (if equipped), cooling fan **(Figure 9-15, (3))**, spacer **(Figure 9-15, (2))**, cooling water pump V-pulley **(Figure 9-15, (1))**, and V-belt.

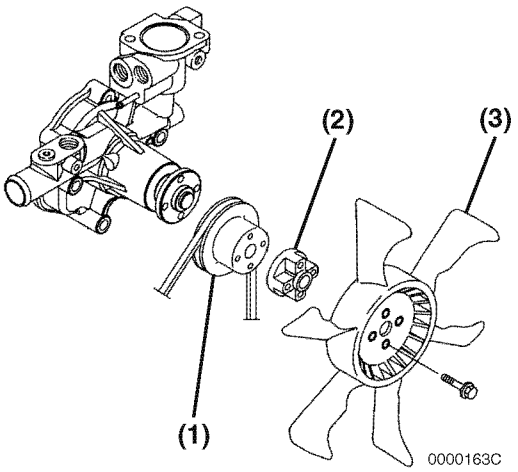

Figure 9-15

1. Remove the crank shaft pulley and gear case cover. See *Removal of Timing Gear Case Cover on page 6-73*.
2. Remove the lubricating oil pump assembly mounting bolts. Remove the lubricating oil pump assembly **(Figure 9-16, (1))** from the gear case flange **(Figure 9-16, (2))**.
3. You can remove by hand the lubricating oil pump cover **(Figure 9-14, (5))** and outer rotor **(Figure 9-14, (4))**.

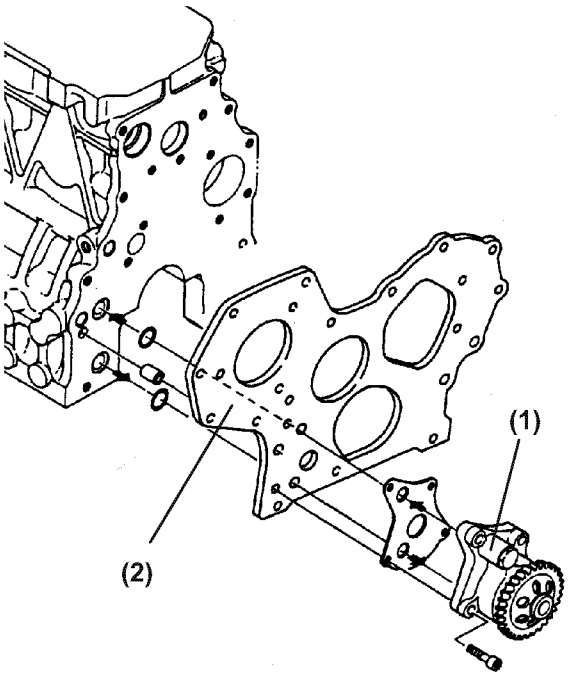

Figure 9-16

Cleaning and inspection

Clean the lubricating oil pump, pressure regulator valve **(Figure 9-14, (7))**, and rotor inserting portion. Check the parts for wear or flaw. Replace the parts with new ones as needed.

CAUTION

- **NEVER overfill the engine with engine oil.**
- **ALWAYS keep the oil level between the upper and lower lines on the oil cap / dipstick.**

0000015en

Check Outer Rotor Outside Clearance

Inspect the outside diameter clearance of the outer rotor. To inspect this, insert a feeler gauge between the outer rotor **(Figure 9-17, (1))** and the lubricating oil pump body **(Figure 9-17, (2))**.

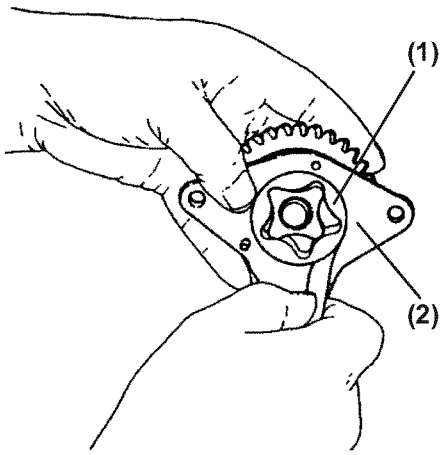

Figure 9-17

Record the measurement(s) and see Outer Rotor Outside Clearance on page 9-6 for the service limits.

Outer Rotor to Inner Rotor Tip Clearance

Inspect the tip clearance between the outer and inner rotors. To inspect this, insert a feeler gauge between the inner rotor tooth tip **(Figure 9-18, (1))** and the outer rotor tooth tip **(Figure 9-18, (2))**, and measure the clearance.

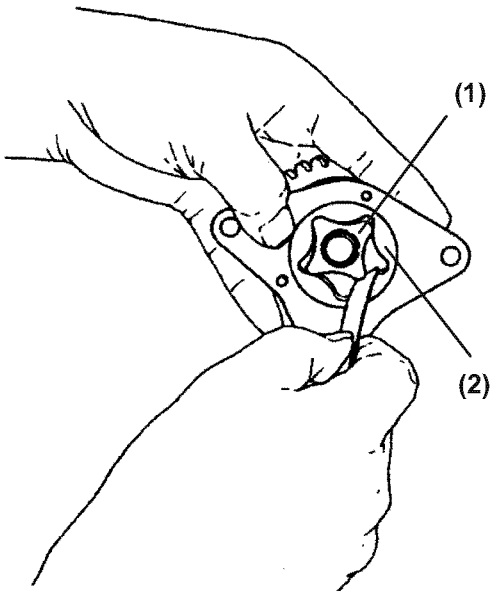

Figure 9-18

Record the measurement(s) and see Outer Rotor to Inner Rotor Tip Clearance on page 9-6 for the service limits.

Check Outer Rotor Side Clearance

Inspect the side clearance between the lubricating oil pump body and the outer rotor. To measure the side clearance, use a straight edge and feeler gauge (as shown in **Figure 9-19**) or a depth micrometer.

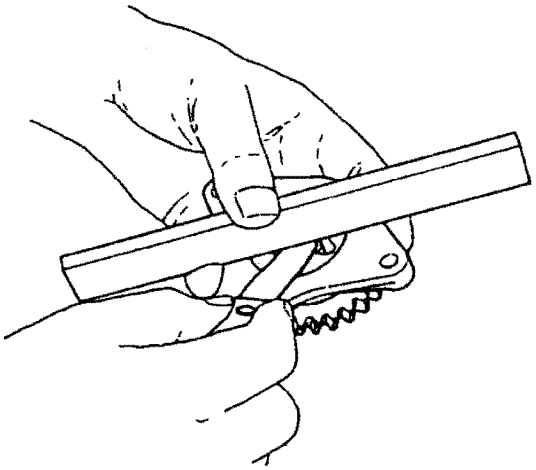

Figure 9-19

Record the measurement(s) and see Outer Rotor Outside Clearance on page 9-6 for the service limits.

Check Rotor Shaft Clearance

Inspect the rotor shaft clearance. Measure the outside diameter of the rotor shaft **(Figure 9-20, (1))** and the inside diameter of the cover.

Determine the clearance by subtracting the outside diameter of the rotor from the inside diameter of the cover.

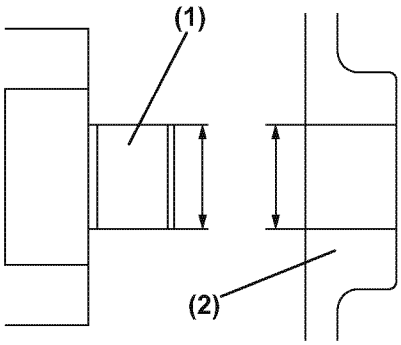

Figure 9-20

Record the measurement(s) and see Rotor Shaft Clearance <Trochoid type 3TNV82A-B - 4TNV88-B, 4TNV94L - 4TNV106T> on page 9-7 for the service limits.

Reassembly of Oil Pump

1. Apply clean lubricating oil to the lubricating oil pump body and inner rotor assembly as well as to the outer rotor.
2. Insert the outer rotor into the lubricating oil pump body and inner rotor assembly and install the cover.
3. Replace the packing with new one.
4. Install the lubricating oil pump assembly to the gear case flange by tightening the bolts with the specified torque.
5. Install the gear case cover. For more information, *See Installation of Gear Case Cover on page 6-97*.
6. Install the crank shaft pulley.
7. Install the cooling water pump V-pulley **(Figure 9-21, (1))**, spacer **(Figure 9-21, (2))**, cooling water fan **(Figure 9-21, (3))**, and fan guard (if equipped).

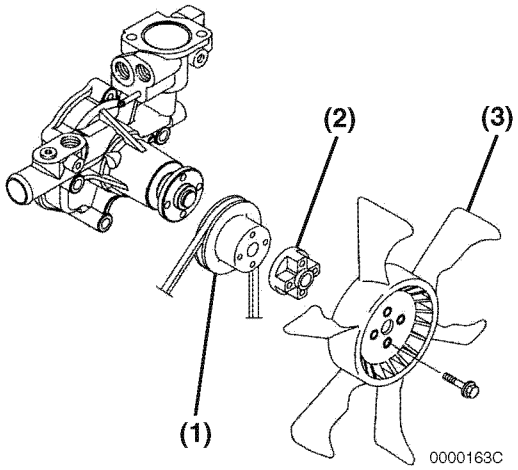

Figure 9-21

8. Install the V-belt. Adjust the belt to uniform tensile strength in accordance with the instructions given in *Check and Adjust Cooling Fan V-Belt on page 5-22*.

TROCHOID OIL PUMP

4TNV94L/98/106 Oil Pump Components

The oil pump on these model engines is located in the front gear case and is driven by the same gear train that drives the camshaft and fuel injection pump. You must remove the front gear case cover to gain access to the oil pump.

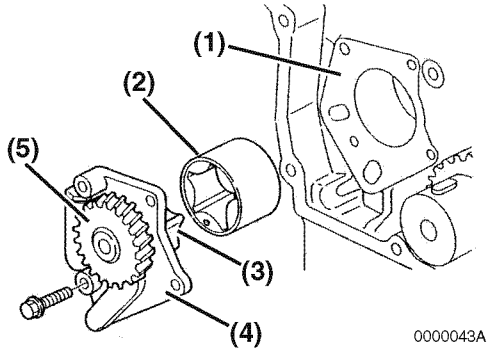

1 – Gear Case Housing
2 – Outer Rotor
3 – Inner Rotor
4 – Cover Plate
5 – Drive Gear

Figure 9-22

Disassembly of Oil Pump

CAUTION

If the oil pump must be replaced, replace it as an assembly only. Do not replace individual components.

0000030en

Remove the engine cooling fan guard (if equipped), engine cooling fan **(Figure 9-23, (3))**, spacer **(Figure 9-23, (2))**, engine coolant pump V-pulley **(Figure 9-23, (1))** and V-belt.

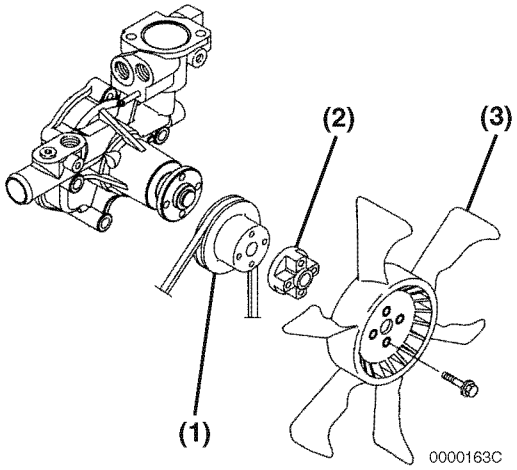

Figure 9-23

1. Remove the crankshaft pulley and the gear case cover. *See Removal of Timing Gear Case Cover on page 6-73.*
2. Remove the oil pump assembly bolts. Remove the oil pump assembly **(Figure 9-24, (1))** from the gear case housing **(Figure 9-24, (2))**.

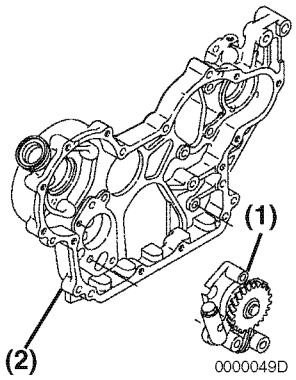

Figure 9-24

Cleaning and Inspection

Wash the oil pump, oil pressure regulator and oil pump cavity. Inspect for wear or damage. Replace as necessary.

⚠ CAUTION

If any oil pump component clearance exceeds its limit, the oil pump must be replaced as an assembly.

0000015en

Check Outer Rotor Outside Clearance

Determine the outside clearance of the outer rotor. Insert a feeler gauge between the outer rotor **(Figure 9-25, (1))** and gear case oil pump cavity **(Figure 9-25, (2))**.

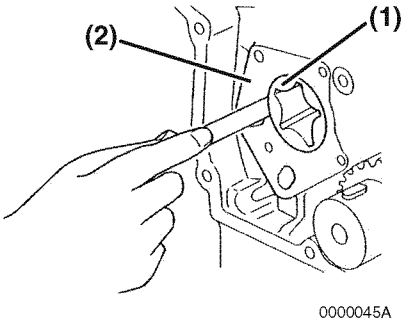

Figure 9-25

Record the measurement(s) and see Check Outer Rotor Outside Clearance on page 9-11 for the service limits.

Outer Rotor to Inner Rotor Tip Clearance

Determine the outer rotor to inner rotor tip clearance. Insert a feeler gauge between the top of an inner rotor tooth **(Figure 9-26, (1))** and the top of an outer rotor tooth **(Figure 9-26, (2))** and measure the clearance.

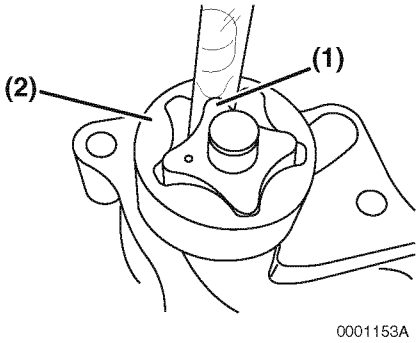

Figure 9-26

Record the measurement(s) and see Outer Rotor to Inner Rotor Tip Clearance on page 9-11 for the service limits.

Check Outer Rotor Side Clearance

Determine the side clearance of the outer rotor across the pump cavity. Measure the depression using a depth micrometer **(Figure 9-27, (1))**.

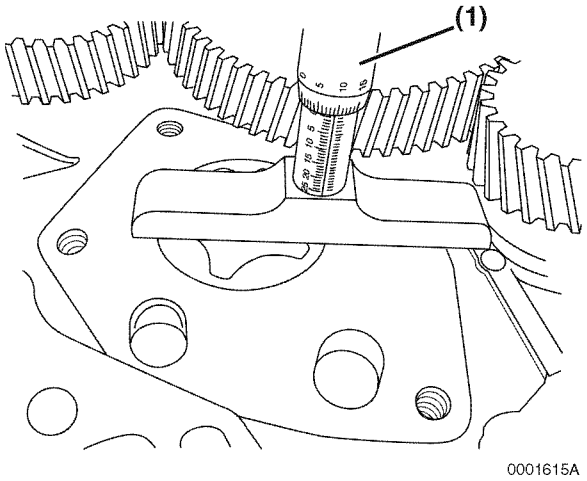

Figure 9-27

Record the measurement(s) and see Check Outer Rotor Side Clearance on page 9-12 for the service limits.

Check Rotor Shaft Clearance

Determine the rotor shaft clearance. Measure the outside diameter of the rotor shaft **(Figure 9-28, (1))** and the bore diameter in the gear case housing **(Figure 9-28, (2))**.

Calculate the difference between the two measurements to determine the clearance.

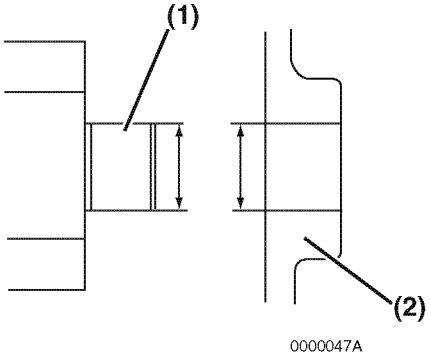

Figure 9-28

Record the measurement(s) and see Rotor Shaft Clearance <Trochoid type 3TNV82A-B - 4TNV88-B, 4TNV94L - 4TNV106T> on page 9-7 for the service limits.

Reassembly of Oil Pump

1. Lubricate the outer rotor and pump bore in the gear case with clean engine oil.
2. Reinstall the outer rotor in the gear case housing. The punch mark **(Figure 9-29, (1))** on the end of the outer rotor must face away from the gear case housing **(Figure 9-29, (2))**.

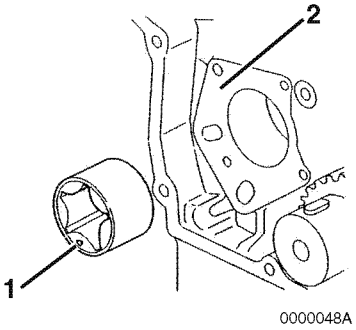

Figure 9-29

3. Reinstall the oil pump assembly **(Figure 9-30, (1))** into the gear case housing **(Figure 9-30, 2)**. Tighten the bolts to specified torque.

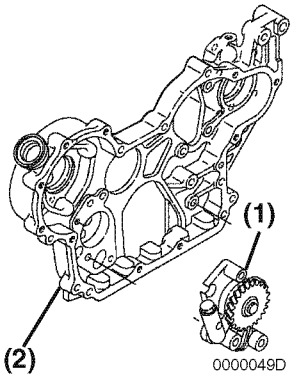

Figure 9-30

4. Reinstall the gear case cover and crankshaft pulley. *See Installation of Gear Case Cover on page 6-97.*
5. Reinstall the engine coolant pump V-pulley **(Figure 9-31, (1))**, spacer **(Figure 9-31, (2))**, engine cooling fan **(Figure 9-31, (3))** and engine cooling fan guard (if equipped).

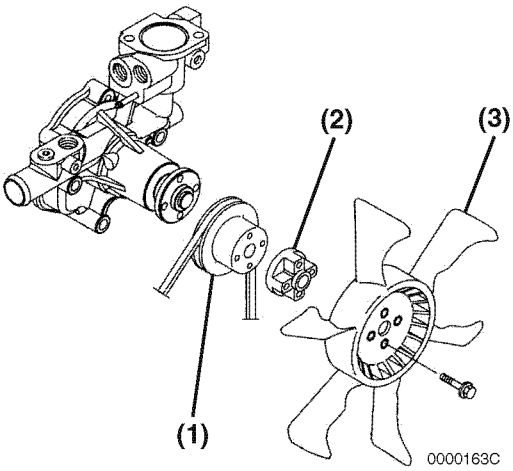

Figure 9-31

6. Reinstall the V-belt. Tighten the V-belt to the proper tension as described in *Check and Adjust Cooling Fan V-Belt on page 5-22.*

This Page Intentionally Left Blank

Section 10

TURBOCHARGER

Page

Before You Begin Servicing 10-3
Introduction 10-5
Specifications 10-5
Turbocharger Service Information 10-5
Troubleshooting 10-6
Excessive Exhaust Smoke 10-6
Generates White Smoke 10-7
Sudden Oil Decrease 10-7
Decrease in Output 10-7
Poor (Slow) Response (Starting) of Turbocharger 10-7
Abnormal Sound or Vibration 10-7
Turbocharger Components 10-8
Turbocharger Component Functions 10-10
Theory of Operation 10-11
Compressor Side Sealing Mechanism 10-11
Waste Gate Modulation 10-11
Washing Procedure 10-12
Periodic Inspection 10-13
Visual Inspection 10-13
Inspection of Rotor Rotation 10-13
Inspection of Rotor Play 10-13
Removal of Turbocharger 10-13
Checking Rotor Play 10-14
Waste Gate Valve Test 10-14
Waste Gate Actuator Leak Test 10-15
Installation of Turbocharger 10-15

This Page Intentionally Left Blank

BEFORE YOU BEGIN SERVICING

⚠ WARNING

ENTANGLEMENT HAZARD!

- Stop the engine before you begin to service it.
- NEVER leave the key in the key switch when you are servicing the engine. Someone may accidentally start the engine and not realize you are servicing it. This could result in a serious injury.
- If you must service the engine while it is operating, remove all jewelry, tie back long hair, and keep your hands, other body parts and clothing away from moving / rotating parts.
- Failure to comply could result in death or serious injury.

0000010en

⚠ WARNING

FUME / BURN HAZARD!

- Always read and follow safety related precautions found on containers of hazardous substances like parts cleaners, primers, sealants and sealant removers.
- Failure to comply could result in death or serious injury.

0000014en

⚠ WARNING

Never apply over 40 psi (2.8 kgf/cm) to the waste gate actuator.

0000026en

⚠ CAUTION

FLYING OBJECT HAZARD!

- ALWAYS wear eye protection when servicing the engine and when using compressed air or high-pressure water. Dust, flying debris, compressed air, pressurized water or steam may injure your eyes.
- Failure to comply may result in minor or moderate injury.

0000003en

CAUTION

For maximum engine life, Yanmar recommends that when shutting the engine down, you allow the engine to idle, without load, for five minutes. This will allow the engine components that operate at high temperatures, such as the turbocharger (if equipped) and exhaust system, to cool slightly before the engine itself is shut down.

0000008en

CAUTION

Avoid damage to the turbocharger or the engine. Do not spray blower wash fluid or water too quickly.

Use short strokes from a spray bottle to inject blower wash fluid or water into the turbocharger.

Spraying too much wash fluid or water, or spraying too quickly will damage the turbocharger.

0000063en

CAUTION

Do not allow any material to fall into the oil lines or the oil inlet and outlet ports of the turbocharger.

0000064en

CAUTION

If the waste valve does not meet specifications, replace the turbocharger or have it repaired by a qualified repair facility.

0000078en

INTRODUCTION

This section of the *Service Manual* describes the servicing of the RHF5, RHB31 and RHB51 model turbochargers.

SPECIFICATIONS

Turbocharger Service Information

Applicable Engine Model (application)	3TNV84T (CL, VM) 4TNV84T (CL)	3TNV84T (VM)	4TNV98T	4TNV106T (CL, VM)
Turbocharger Model	RHB31	RHB51	RHF5	RHF5
Turbocharger Specification	Standard (w/waste gate)			
Turbine Type	Radial flow			
Blower (Compressor) Type	Centrifugal			
Lubrication	External lubrication			
Maximum Continuous Allowable Speed	250,000	180,000		
Maximum Continuous Allowable Gas Inlet Temperature	750°F (399°C)			
Weight (Dry)	5.4 lb (24 N; 2.4 kgf)	9.2 lb (41 N; 4.2 kgf)	10.3 lb (46 N; 4.7 kgf)	10.3 lb (46 N; 4.7 kgf)

Note: VM application is provided with the waste gate.

TROUBLESHOOTING

The following troubleshooting procedures apply to problems identified as turbocharger related. Consider all other troubleshooting possibilities before cleaning or removing the turbocharger.

Excessive Exhaust Smoke

Cause	Corrective action
Clogged air cleaner element	Clean or replace the air cleaner element
Blocked air intake port	Correct the condition
Leak from a joint in intake line	Correct the condition

Cause	Corrective action
1. Compressor impeller dirty	1. Wash the impeller blades.
2. Deposit of impurities in oil sticking on the turbine side seal portion to make turbine revolution heavy	2. Repair the turbocharger. Send to a qualified repair facility.
3. Sticking bearing:	
3a. Insufficient lubrication or clogged lubrication piping	3a. Repair turbocharger. Send to qualified repair facility.
3b. Excessively high oil temperature	3b. Inspect the lubricating oil line for problem. Correct the condition and replace lubricating oil.
3c. Unbalanced rotating part	3c. Repair the turbocharger. Send to a qualified repair facility.
3d. Insufficient warming up or sudden stop from loaded operation (no-load operation)	3d. Improper operation of the machine. Refer to the *Operation Manual*.
4. Contact or breakdown of turbine wheel or blower vane:	
4a. Excessive revolution	4a. Inspection and repair of each engine part
4b. Excessive exhaust temperature rise	4b. Inspection and repair of each engine part
4c. Foreign matter within turbocharger	4c. Clean the air cleaner and engine compartment. Repair the turbocharger. Send to a qualified repair facility.
4d. Worn bearing	4d. Repair the turbocharger. Send to a qualified repair facility.
4e. Incorrect assembly of turbocharger	4e. Repair the turbocharger. Send to a qualified repair facility.

Cause	Corrective action
Exhaust system gas leak prior to the turbocharger. Condition will decrease turbocharger revolutions.	Inspect the exhaust system for leaks. Correct the condition.
Deformed or clogged exhaust pipe. Condition will decrease turbocharger revolutions.	Correct the condition.

Generates White Smoke

Cause	Corrective action
Clogged or deformed oil return pipe causing oil flow to the blower on the turbine side	Correct the condition
Excessive bearing wear causing abnormal wear or damage of the seal ring	Repair the turbocharger. Send to a qualified repair facility.

Sudden Oil Decrease

Cause	Corrective action
Excessive bearing wear causing abnormal wear or damage of the seal ring	Repair turbocharger. Send to qualified repair facility.

Decrease in Output

Cause	Corrective action
Gas leak from any part in exhaust piping	Correct the condition
Air leak from discharge side of blower	Correct the condition
Clogged air cleaner element	Clean or replace the air cleaner element
Damaged turbocharger	Repair the turbocharger. Send to a qualified repair facility

Poor (Slow) Response (Starting) of Turbocharger

Cause	Corrective action
Hard carbon deposit on the turbine side (wheel sealing portion) causing abnormal revolution of the turbine shaft	Repair the turbocharger. Send to a qualified repair facility
Incomplete combustion	Correct the condition

Abnormal Sound or Vibration

Cause	Corrective action
Excessively narrowed gas path due to clogged nozzle in the turbine wheel chamber or reverse flow of blower discharge in acceleration (generally called surging)	Repair the turbocharger. Send to a qualified repair facility
Contact rotating part	Repair the turbocharger. Send to a qualified repair facility

Cause	Corrective action
Loosened intake, exhaust or oil pipe connection with the turbocharger	Correct the condition
Damaged bearing, contact between rotating part and adjacent part, or chipping of the turbine wheel or blower vane due to foreign matter within the turbocharger	Repair the turbocharger. Send to a qualified repair facility
Unbalanced rotating part	Repair the turbocharger. Send to a qualified repair facility

TURBOCHARGER COMPONENTS

Note: The following illustration is provided for informational purposes only. Yanmar does not offer individual service parts for turbochargers. If the turbocharger is worn or damaged, it should be replaced or repaired by a qualified repair facility.

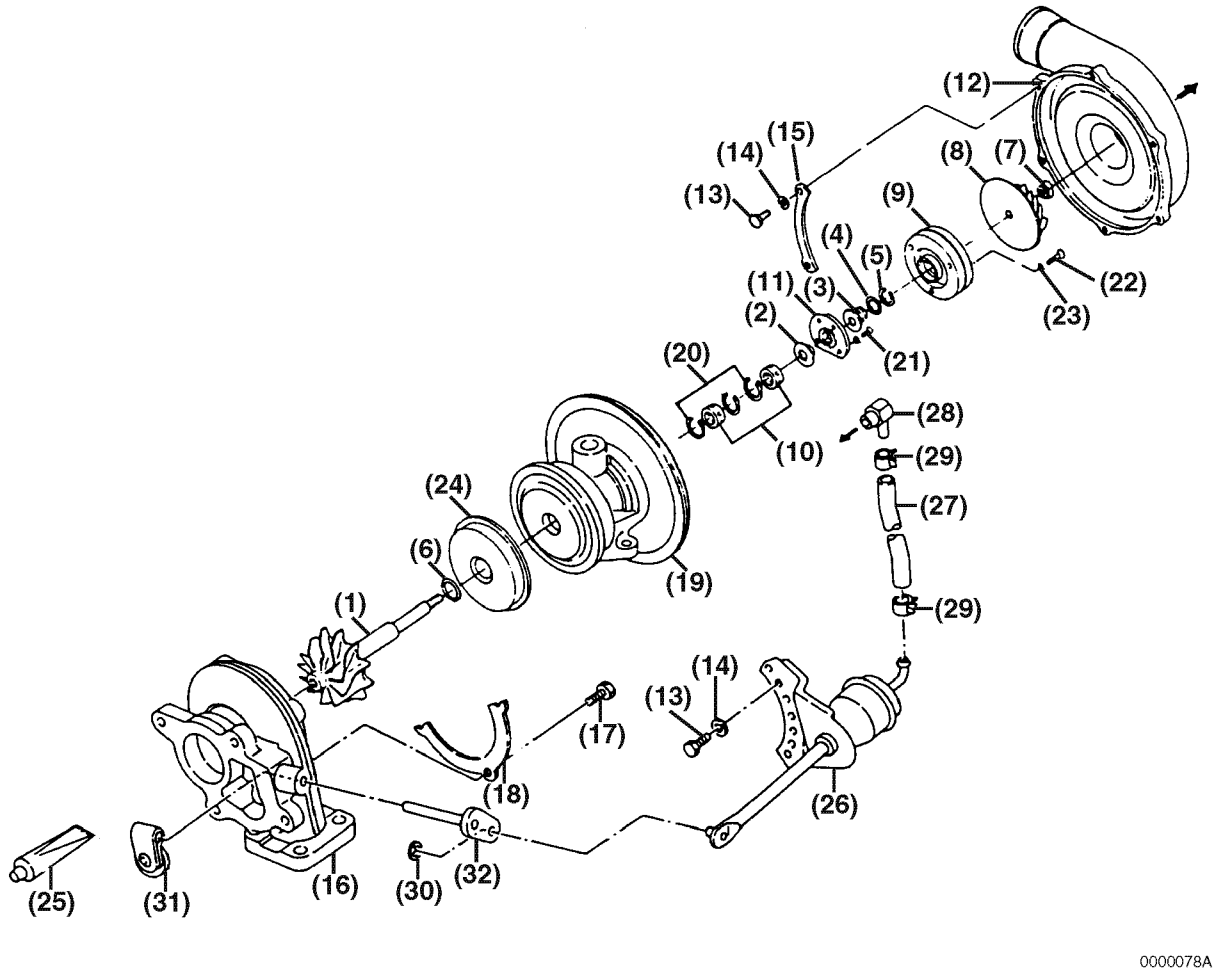

Figure 10-1

1 – Turbine Shaft
2 – Thrust Bearing
3 – Oil Thrower
4 – Seal Ring
5 – Seal Ring
6 – Seal Ring (Turbine Side)
7 – Lock Nut
8 – Impeller
9 – Seal Plate
10 – Journal Bearing
11 – Thrust Bearing
12 – Compressor Housing
13 – Flanged Bolt
14 – Spring Washer
15 – Clamp
16 – Turbine Housing
17 – Bolt
18 – Lock Plate
19 – Bearing Housing
20 – Retaining Ring
21 – Bolt
22 – Bolt
23 – Lock Washer
24 – Heat Protector
25 – Liquid Gasket
26 – Waste Gate Actuator
27 – Hose
28 – Adapter
29 – Clip
30 – Retaining Ring
31 – Waste Gate Valve
32 – Link Plate

TURBOCHARGER COMPONENT FUNCTIONS

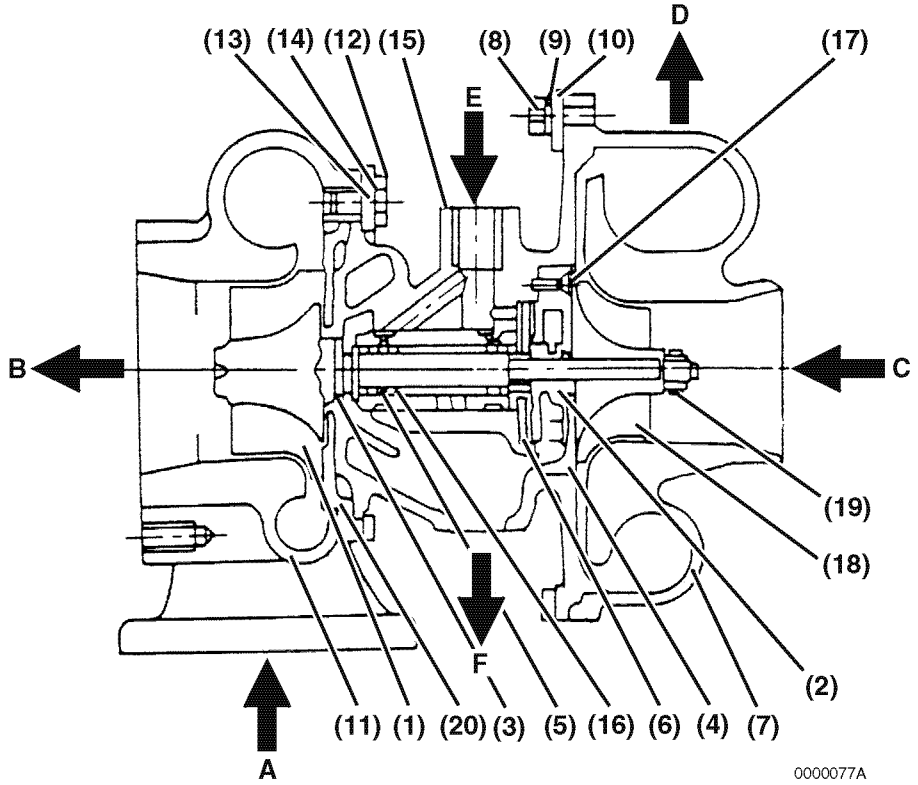

1 – Turbine Shaft
2 – Oil Thrower
3 – Turbine Side Seal Ring
4 – Seal Plate
5 – Journal Bearing
6 – Thrust Bearing
7 – Compressor Housing
8 – M5 Hex Bolt
9 – M5 Spring Washer
10 – Compressor Side Clamp
11 – Turbine Housing
12 – M6 Hex Bolt
13 – Turbine Side Clamp
14 – Lock Washer
15 – Bearing Housing
16 – Retaining Ring
17 – M3 Countersunk Flat-Head Bolt
18 – Compressor Wheel
19 – Shaft End Nut
20 – Heat Protector

A. Exhaust Gas Inlet
B. Exhaust Gas Outlet
C. Air Inlet
D. Air Outlet
E. Oil Inlet
F. Oil Outlet

Figure 10-2

Theory of Operation

Normally aspirated engines produce horsepower that is limited by the atmospheric pressure of the induction air. The turbocharger is an exhaust gas pressure driven device that adds to the atmospheric pressure, resulting in a boost in pressure at the combustion chambers. This substantially increases the amount of fuel that can be injected into the combustion chambers, while maintaining the proper fuel-to-air ratio. A slight parasitic loss is imposed on the engine because of added back pressure in the exhaust system. That loss is offset by horsepower gains. The net result is substantially increased overall horsepower over normally aspirated engines.

The turbocharger consists of two main components:

- Turbine
- Compressor

Turbine

The turbine is driven by exhaust gas pressure from the engine and is coupled to a shaft on the compressor side of the turbocharger.

Exhaust gas velocity is accelerated at the nozzle portion in the turbine housing where the cross-sectional area is reduced. As exhaust passes over the turbine impeller at high linear velocity, the turbine shaft is rotated at proportionally high rpm.

Compressor

The compressor is driven by a shaft on the turbine side of the turbocharger and increases the induction air pressure at the intake manifold.

The compressor impeller draws induction air into the turbocharger, compresses it and directs it into the engine at high pressure.

A seal ring and heat insulating plate thermally isolate heat energy, at the turbine side, from the bearings and the induction air, at the compressor side.

Bearings

Thrust Bearing

A thrust force is continuously imposed on the turbine shaft during engine operation. A thrust bearing prevents the shaft from moving laterally under this thrust force.

Radial Bearing

A floating radial bearing moves with the turbine shaft as oil films form on the inside and outside bearing surfaces. The bearing slipping speed is slower than the turbine shaft speed, resulting in higher dynamic stability and reduced mechanical noise.

Lubrication

The oil pump delivers oil from the engine to the turbocharger for cooling and lubrication of the bearings. As oil leaves the turbocharger, it is returned to the engine.

Compressor Side Sealing Mechanism

A seal ring and a seal plate form a double wall structure at the rear of the compressor impeller. The seal ring and seal plate prevent Intake air and oil leakage.

Waste Gate Modulation

Excessive boost pressure that cannot be accommodated by the engine can damage the turbocharger. The waste gate is a component that monitors intake boost pressure on the compressor side and diverts exhaust gases around the turbocharger turbine. The amount of exhaust gas diverted is varied to limit turbine rpm and maintain the intake pressure equal to, or less than the specified maximum level. This improves the response to load variation in the low to medium rpm range and minimizes black smoke.

Waste Gate Control

A mechanical pressure sensor in the outlet of the compressor side of the turbocharger opens and closes the waste gate to maintain the specified intake pressure at the intake manifold.

WASHING PROCEDURE

Note: Inspection, cleaning and repair of the internal turbocharger components must be performed by a qualified repair facility.

The washing procedure described in this section is intended to clean the impeller on the compressor only if the engine loses rpm, seems sluggish or has insufficient boost pressure. The process does not require disassembling any portion of the turbocharger.

Since washing is quick and easy, perform this procedure before considering replacement.

1. Start the engine and allow it to reach the normal operating temperature.

CAUTION

Avoid damage to the turbocharger or the engine. Do not spray blower wash fluid or water too quickly.

Use short strokes from a spray bottle to inject blower wash fluid or water into the turbocharger.

Spraying too much wash fluid or water, or spraying too quickly will damage the turbocharger.

0000063en

2. While the engine is operating at normal load (75 - 80% of maximum), slowly and evenly spray 2 - 3 oz (60 - 90 cc) of blower wash fluid over a period of ten to fifteen seconds into the air inlet **(Figure 10-3)**.

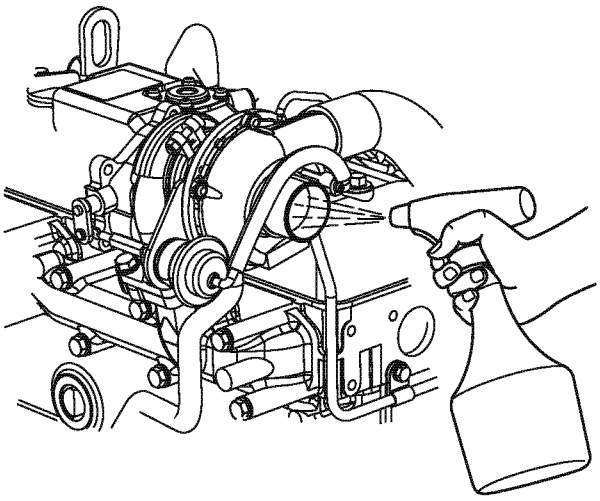

0000860

Figure 10-3

3. Continue to operate the engine under the same load for three to four minutes.
4. While the engine is still operating at normal load (75 - 80% of maximum), slowly and evenly spray 2 - 3 oz (60 - 90 cc) of clean water over a period of ten to fifteen seconds into the air inlet.
5. Continue to operate the engine under the same load for at least ten minutes to completely dry the air intake system and turbocharger.
6. Test the engine performance. If engine performance has not improved, repeat steps 2 through 6. If the engine performance does not improve after executing the washing process three times, replace the turbocharger or have it repaired by a qualified repair facility.

PERIODIC INSPECTION

Inspect the turbocharger at regularly scheduled intervals.

Application	Inspection interval					
	200 hours	400 hours	500 hours	800 hours	1000 hours	2000 hours
Construction Equipment			First 6 months or 500 hrs		First 12 months or 1000 hrs	Every 24 months or 2000 hrs
Farm Equipment	First 6 months or 200 hrs	First 12 months or 400 hrs		Every 24 months or 800 hrs		
Engine Oil and Filter Replacement	Based on engine operation manual					

Visual Inspection

1. Check for indications of oil leaks at the oil inlet and outlet lines. Repair or replace the oil lines as needed.
2. Inspect the air inlet connection to the turbocharger's turbine side for cracks or broken hardware. Repair or replace the connection as needed.
3. Inspect the exhaust outlet connection to the turbocharger's compressor side for cracks or broken hardware. Repair or replace the connection as needed.

Inspection of Rotor Rotation

1. With the engine cool and not operating, manually rotate the rotor. Smooth rotation is normal. Any catching or resistance to rotation is an indication of abnormal operation. Replace the turbocharger or have it repaired by a qualified repair facility.
2. Start the engine.
3. After the engine reaches normal operating temperature, place a stethoscope firmly against the turbocharger case.
4. Increase the rpm gradually. A high-pitched sound, occurring at intervals of two or three seconds, is an indication of abnormal operation. Replace the turbocharger or have it repaired by a qualified repair facility.

Inspection of Rotor Play

To inspect the rotor, the turbocharger must be removed. Inspect for maximum rotor end play and run-out limits before reinstalling.

Removal of Turbocharger

1. Shut down the engine and allow the turbocharger to cool. Remove the exhaust outlet connection from the turbocharger housing.
2. Remove the air inlet connection from the turbocharger housing.

CAUTION

Do not allow any material to fall into the oil lines or the oil inlet and outlet ports of the turbocharger.

0000064en

3. Remove the inlet and outlet oil lines from the turbocharger. Plug the lines and ports with tape to prevent contamination. Discard the sealing washers and O-rings. Inspect the oil lines and replace if damaged.
4. Remove the turbocharger mounting nuts from the mounting studs. Lift the turbocharger from the engine and place it on a clean, level working surface.
5. Discard the turbocharger exhaust manifold gasket.

Checking Rotor Play

Note: If rotor play measurements are not within specification, replace the turbocharger assembly or have it repaired by a qualified facility.

Rotor Play	Standard Dimension			Wear Limit		
	RHF5	RHB31	RHB51	RHF5	RHB31	RHB51
End Play	0.0011 - 0.0024 in. (0.03 - 0.06 mm)	0.0009 - 0.0021 in. (0.022 - 0.053 mm)	0.0012 - 0.0024 in. (0.03 - 0.06 mm)	0.0044 in. (0.09 mm)	0.0028 in. (0.07 mm)	0.0035 in. (0.09 mm)
Run-out	0.0031 - 0.0051 in. (0.08 - 0.13 mm)	0.0024 - 0.0037 in. (0.061 - 0.093 mm)	0.0031 - 0.0051 in. (0.08 - 0.13 mm)	0.007 in. (0.17 mm)	0.0047 in. (0.12 mm)	0.0067 in. (0.17 mm)

To Check Rotor End Play:

1. Set up a dial indicator as shown **(Figure 10-4)**.
2. Manually move the rotor end-to-end while observing indicated readings. Replace the turbocharger if end play measurements are outside specified limits. *See table above.*

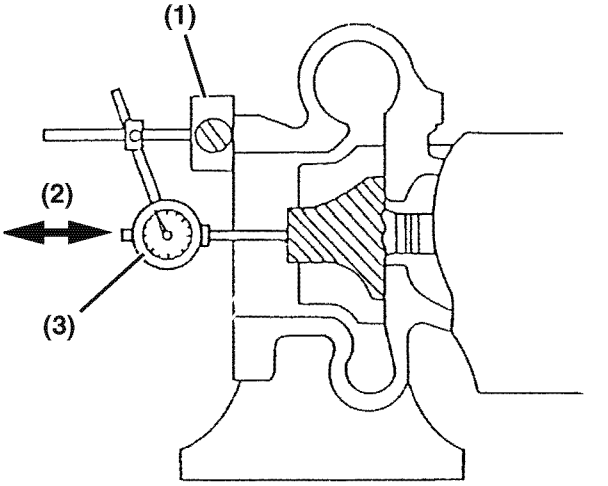

Figure 10-4

To Check Rotor Run-out:

1. Set up a dial indicator as shown **(Figure 10-5)**.
2. Manually rotate the rotor while observing indicated limits. Replace the turbocharger if run-out measurements are outside specified limits. *See table above.*

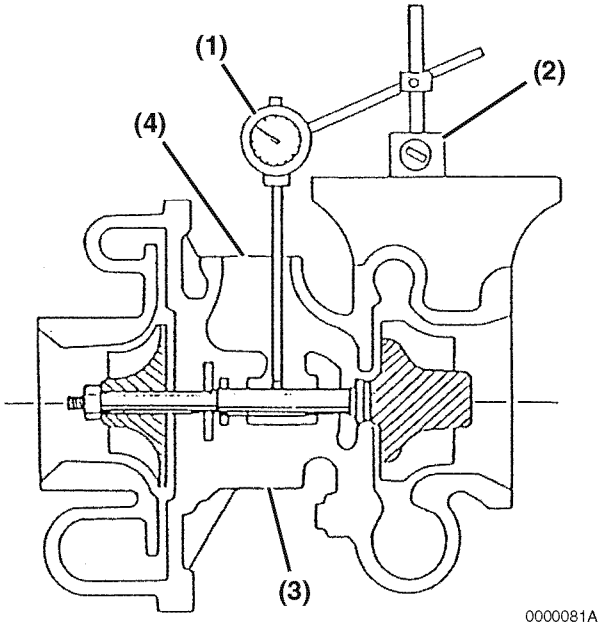

Figure 10-5

Waste Gate Valve Test

Before reinstalling the turbocharger, verify the operation of the waste gate valve. Poor waste gate operation will adversely affect the engine performance.

CAUTION

If the waste valve does not meet specifications, replace the turbocharger or have it repaired by a qualified repair facility.

0000078en

1. Connect a hand-operated air pump to the waste gate actuator pipe **(Figure 10-6, (1))**. The pump should be equipped with a 30 psi (0.21 MPa; 2.21 kgf/cm^2) pressure gauge **(Figure 10-6, (2))**, and a pressure release valve to release any pressure pumped into the system. (Similar pumps are used to check for leaks in marine gear cases.)

⚠ WARNING

Never apply over 40 psi (2.8 kgf/cm) to the waste gate actuator.

0000026en

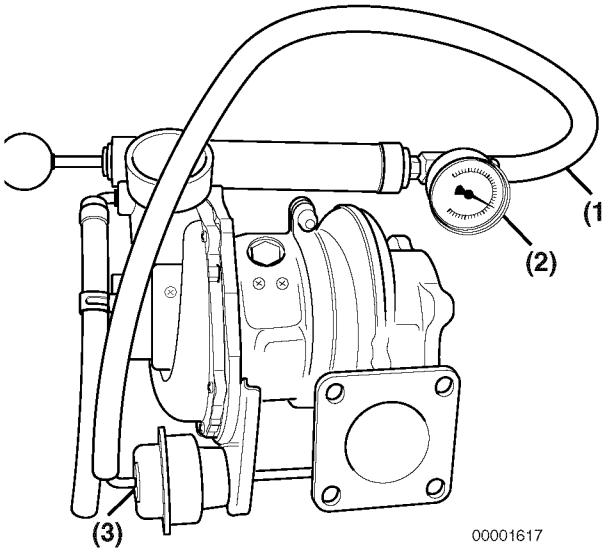

Figure 10-6

2. Apply 17 psi (0.12 MPa; 1.2 kgf/cm^2) to the waste gate actuator **(Figure 10-6, (3))** circuit. Observe if the waste gate valve is open fully. If the waste valve does not open fully, replace the turbocharger or have it repaired by a qualified repair facility.

Waste Gate Actuator Leak Test

Allow the pressure, 17 psi (0.12 MPa; 1.2 kgf/cm^2) to remain in the circuit for one minute. After one minute, observe the pressure reading.

- If the pressure reading is equal to or greater than 15.9 psi (0.11 MPa; 1.1 kgf/cm^2), the waste gate actuator is not leaking and is operating properly.
- If the pressure reading is less than 15.9 psi (0.11 MPa; 1.1 kgf/cm^2), the waste gate actuator is leaking. Replace the turbocharger or have it repaired by a qualified repair facility.

Installation of Turbocharger

1. Pour 2 oz (60 cc) of clean engine oil in the oil inlet port at the top of the turbocharger. Rotate the compressor wheel to ensure the shaft bearings are lubricated.
2. Flush the oil lines to ensure that they are free of containments.
3. Put a new turbocharger exhaust manifold gasket in place and reinstall turbocharger on the exhaust manifold.
4. Apply anti-seize compound to the turbocharger mounting studs.
5. Reinstall the mounting nuts. Torque the nuts to the specified torque.
6. Install new sealing washers and O-rings and reinstall the inlet and outlet oil lines to the turbocharger.

CAUTION

Do not allow any material to fall into the oil lines or the oil inlet and outlet ports of the turbocharger.

0000064en

7. Reinstall the air inlet connection to the turbocharger turbine housing.
8. Reinstall the exhaust connection to the turbocharger compressor housing.

This Page Intentionally Left Blank

Section 11

STARTER MOTOR

Page

Before You Begin Servicing 11-3
Introduction 11-5
Starter Motor Information 11-5
3TNV82A to 4TNV88 - Standard and Optional 11-5
Starter Motor Specifications 11-7
Starter Motor Troubleshooting 11-8
Starter Motor Components 11-9
Starter Motor 11-10
Removal of Starter Motor 11-10
Disassembly of Starter Motor 11-10
Cleaning and Inspection 11-12
Reassembly of Starter Motor 11-17
Check Pinion Projection Length 11-18
No-Load Test 11-19
Installation of Starter Motor 11-20

This Page Intentionally Left Blank

BEFORE YOU BEGIN SERVICING

⚠ WARNING

ENTANGLEMENT HAZARD!

- Stop the engine before you begin to service it.
- NEVER leave the key in the key switch when you are servicing the engine. Someone may accidentally start the engine and not realize you are servicing it. This could result in a serious injury.
- If you must service the engine while it is operating, remove all jewelry, tie back long hair, and keep your hands, other body parts and clothing away from moving / rotating parts.
- Failure to comply could result in death or serious injury.

0000010en

⚠ WARNING

SHOCK HAZARD!

- Turn off the battery switch (if equipped) or disconnect the negative battery cable before servicing the electrical system.
- Check the electrical harnesses for cracks, abrasions, and damaged or corroded connectors. ALWAYS keep the connectors and terminals clean.
- Failure to comply could result in death or serious injury.

0000009en

⚠ WARNING

FUME / BURN HAZARD!

- Always read and follow safety related precautions found on containers of hazardous substances like parts cleaners, primers, sealants and sealant removers.
- Failure to comply could result in death or serious injury.

0000014en

⚠ CAUTION

FLYING OBJECT HAZARD!

- ALWAYS wear eye protection when servicing the engine and when using compressed air or high-pressure water. Dust, flying debris, compressed air, pressurized water or steam may injure your eyes.
- Failure to comply may result in minor or moderate injury.

0000003en

CAUTION

The starter motor can be damaged if operated continuously longer than 10 seconds while performing the no-load test.

0000034en

CAUTION

Make sure that the combined total resistance of the battery cable in both directions between the starter motor and the battery is within the value indicated on the wiring diagram. The starter motor will malfunction or break down if the resistance is higher than the specified value.

0000054en

CAUTION

The starter motor is water-proofed according to JIS D 0203, R2 which protects the motor from rain or general cleaning. Do not use high-pressure wash or submerse the starter motor in water.

0000055en

CAUTION

Use a specialized battery charger to recharge a battery with a voltage of 8 volts or less. Booster starting a battery with a voltage of 8 volts or less will generate an abnormally high voltage and destroy electrical equipment.

0000056en

INTRODUCTION

This section of the *Service Manual* covers the servicing of the starter motor. Yanmar Part No. 129900-77010 is standard equipment on 4TNV94-98 model engines and is used in this section to show the service procedures for a representative starter motor. For specific part detail, see the *Yanmar Parts Catalog* for the engine you are working on.

STARTER MOTOR INFORMATION

3TNV82A to 4TNV88 - Standard and Optional

YANMAR Part Number	Mfg.	Mfg. Part Number	Specification	No Load			Loaded			
				Terminal Voltage	Amperag e Draw	rpm	Terminal Voltage	Amperag e Draw	Torque	rpm
129129-77010	Denso	228000-0251	DC12V-1.6 hp (1.2 kW)	11.5	90A MAX	3000	8	280 Max	87 in.-lb (9.81N·m; 1.0 kgf·m)	900
129407-77010	Denso	228000-3732	DC12V-1.9 hp (1.4 kW)	11.5	90A MAX	3000	8.5	350 Max	117 in.-lb (13.2 N·m; 1.4 kgf·m)	1000
129608-77010	Hitachi	S114-817A	DC12V-1.9 hp (1.4 kW)	11	90A MAX	2700	8.4	250 Max	74 in.-lb (8.3 N·m; 0.9 kgf·m)	1000
129242-77010	Hitachi	S114-883	DC12V-2.3 hp (1.7 kW)	11	90A MAX	2300	8	370 Max	134 in.-lb (15.1 N·m; 1.5 kgf·m)	880
129136-77011	Hitachi	S13-332	DC12V-3.1 hp (2.3 kW)	11	140A MAX	4100	7.7	400 Max	97 in.-lb (11.0 N·m; 1.1 kgf·m)	1400
129612-77011	Hitachi	S25-166A	DC24V-5.3 hp (4.0kW)	24	100A MAX	3500	18	400 Max	269 in.-lb (30.4 N·m; 3.1 kgf·m)	1000

4TNV94L to 4TNV106T - Standard and Optional

YANMAR Part Number	Mfg.	Mfg. Part Number	Specification	No Load			Loaded			
				Terminal Voltage	Amperag e Draw	rpm	Terminal Voltage	Amperag e Draw	Torque	rpm
129900-77010	Hitachi	S13-204	DC12V-3.1 hp (2.3 kW)	11	140A MAX	4100	7.7	400 Max	97 in.-lb (11.0 N·m; 1.1 kgf·m)	1400
129940-77010	Hitachi	S14-102	DC12V-4.0 hp (3.0 kW)	12	160A MAX	3600	10.85	300 Max	60 in.-lb (6.9 N·m; 0.7 kgf·m)	2000
119131-77010	Hitachi	S24-13	DC24V-4.8 hp (3.5 kW)	23	90A MAX	3100	20.2	250 Max	130 in.-lb (14.7 N·m; 1.5 kgf·m)	1300
129900-77030	Hitachi	S24-14	DC24V-4.8 hp (3.5 kW) Wet	23	90A MAX	3100	20.2	250 Max	130 in.-lb (14.7 N·m; 1.5 kgf·m))	1300
129910-77022	Hitachi	S13-2050	DC12V-3.1 hp (2.3 kW) Wet	11	140A MAX	4100	7.7	400 Max	97 in.-lb (11.0 N·m; 1.1 kgf·m)	1400

STARTER MOTOR SPECIFICATIONS

Yanmar Part Number			129900-77010
Nominal Output			3.0 hp (2.3 kW)
Weight			12.1 lb (5.5 kg)
Revolution Direction (As Viewed From Pinion)			Clockwise
Engagement System			Magnetic Shift
No-load	Terminal Voltage / Current		11 V / 140 A max
	Revolution		4100 rpm (min^{-1})
Loaded	Terminal Voltage / Current		2.5 V / 1050 A max
	Torque		18 ft-lb (24.5 N·m; 2.5 kgf·m) minimum
Clutch System			Overrunning
Pinion Projection Voltage at 212°F (100 °C)			8.6 V max
Pinion DP or Module / Number of Teeth			M3/9
Difference (O-ring, Oil Seal)			Dry (none)
Application			Standard
Brush	Spring Force		7.868 lbf (35 N; 3.6 kgf)
	Height	Standard	0.591 in. (15 mm)
		Limit	0.354 in. (9 mm)
Magnetic Switch	Series Coil Resistance		0.27 W at 68°F (20°C)
	Shunt Coil Resistance		0.60 W at 68°F (20°C)
Commutator	Outside Diameter	Standard	1.437 in. (36.5 mm)
		Limit	1.398 in. (35 mm)
	Run-Out	Standard	0.001 in. (0.03 mm)
		Limit	0.008 in. (0.2 mm)
	Insulation Depth	Standard	0.020 - 0.031 in. (0.5 - 0.8 mm)
		Limit	0.008 in. (0.2 mm)
Armature	Run-Out	Standard	0.001 in. (0.03 mm)
		Limit	0.008 in. (0.02 mm)
Bearing Type	Armature Front	Nominal Number	6903DDU
	Armature Rear		608DDU
	Pinion Front		60004DDU
	Pinion Rear		6904DDU
Pinion Projection Length (Length L)			0.012 - 0.059 in. (0.3 - 1.5 mm)

STARTER MOTOR TROUBLESHOOTING

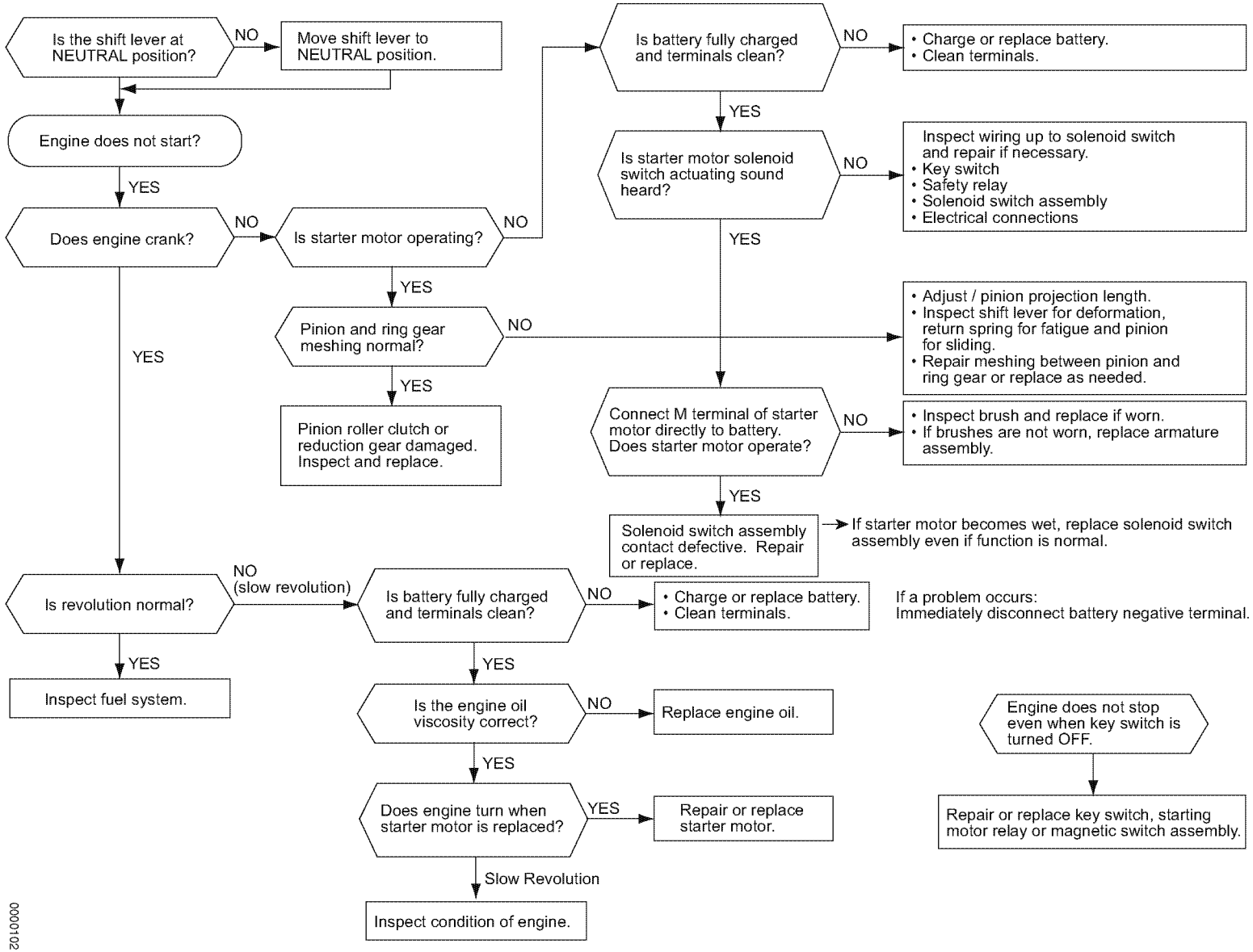

STARTER MOTOR COMPONENTS

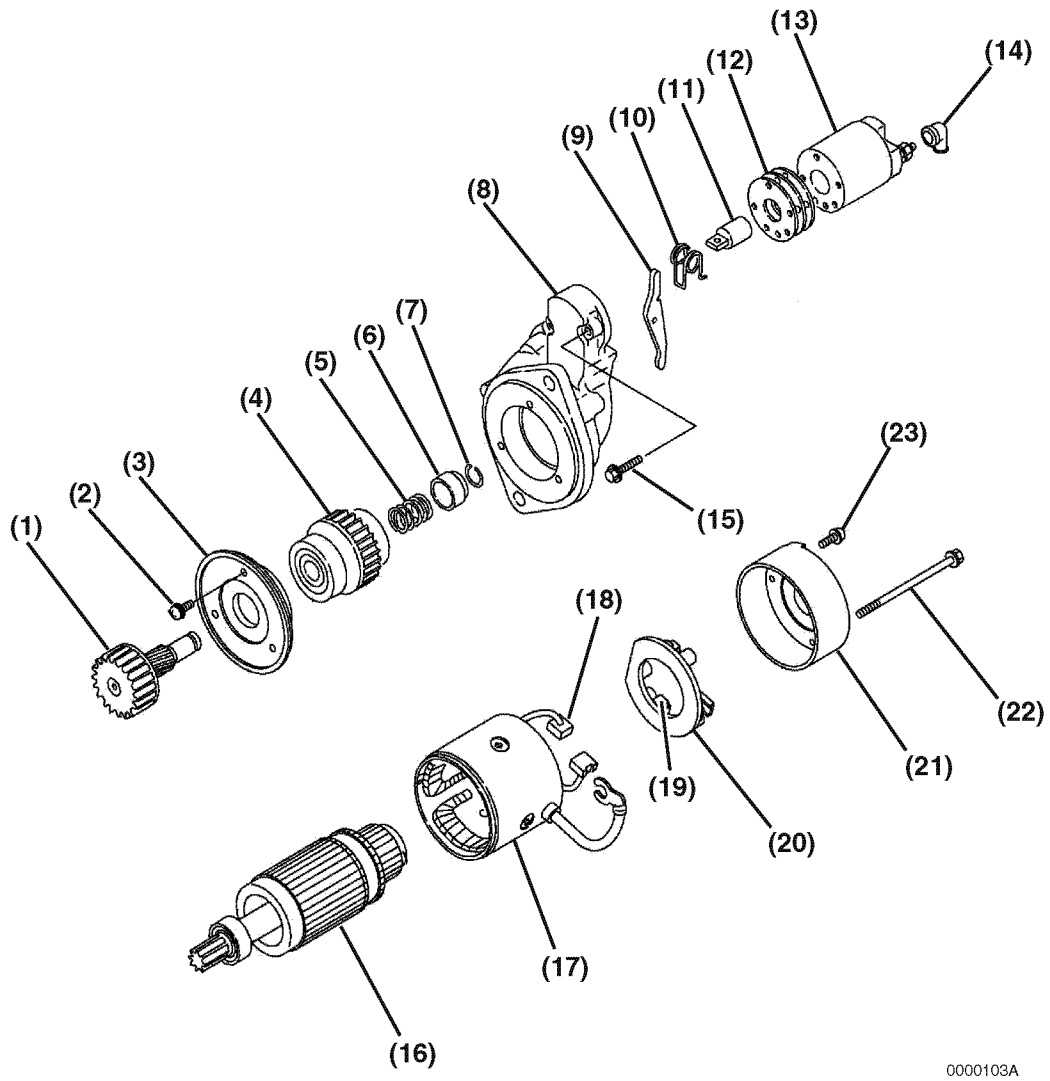

1 – Pinion Shaft
2 – M4 Bolts (3 used)
3 – Bearing Retainer
4 – Pinion Clutch Assembly
5 – Return Spring
6 – Pinion Stop
7 – Retaining Ring
8 – Gear Housing
9 – Shift Lever
10 – Torsion Spring
11 – Plunger
12 – Dust Covers (Shims)
13 – Magnetic Switch Assembly (Solenoid)
14 – Cover
15 – M6 Bolts (2 used)
16 – Armature Assembly
17 – Field Coil Assembly
18 – Positive (+) Brushes
19 – Negative (-) Brushes
20 – Brush Holder Assembly
21 – Rear Cover
22 – M5 Through Bolts (2 used)
23 – M4 Bolts (2 used)

Figure 11-1

STARTER MOTOR

WARNING

SHOCK HAZARD!

- **Turn off the battery switch (if equipped) or disconnect the negative battery cable before servicing the electrical system.**
- **Check the electrical harnesses for cracks, abrasions, and damaged or corroded connectors. ALWAYS keep the connectors and terminals clean.**
- **Failure to comply could result in death or serious injury.**

0000009en

Note: While starter motor design varies between models, the basic repair procedures are the same. The following procedures are typical and may differ from the stater being serviced.

Removal of Starter Motor

1. Disconnect the battery cables at the battery, negative (-) cable first.
2. Remove the electrical wires from the magnetic switch assembly.
3. Remove the starter mounting bolts **(Figure 11-2, (1))**. Remove the starter motor from the flywheel housing.

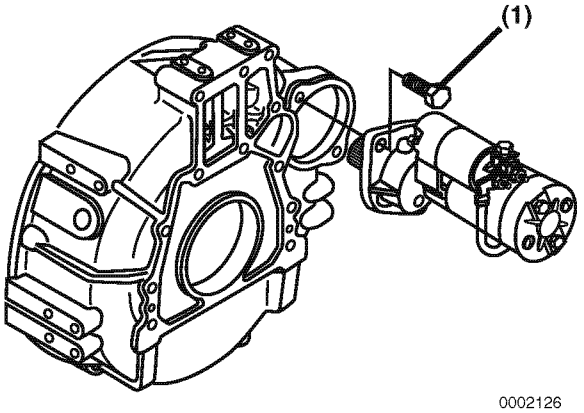

Figure 11-2

Disassembly of Starter Motor

1. Loosen the M8 nut from the magnetic switch (solenoid) assembly **(Figure 11-3)**. Disconnect the wire from the magnetic switch.

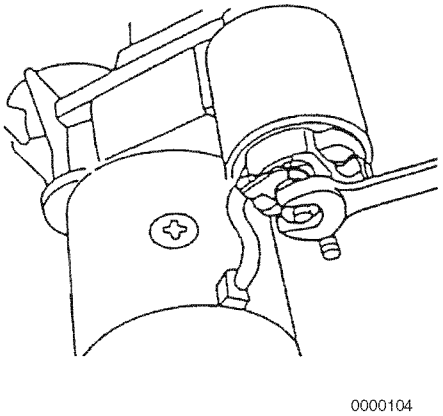

Figure 11-3

2. Remove the two M4 bolts **(Figure 11-4, (1))** securing the rear cover **(Figure 11-4, (2))** to the brush holder assembly **(Figure 11-4, (3))**.

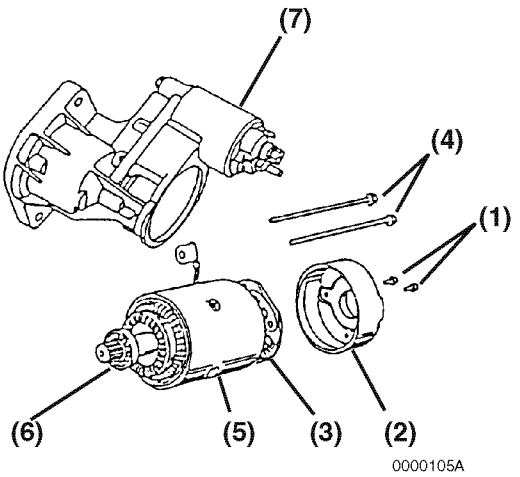

Figure 11-4

3. Remove the two M5 through bolts **(Figure 11-4, (4))**. Separate the rear cover **(Figure 11-4, (2))**, field coil assembly **(Figure 11-4, (5))** with the armature assembly **(Figure 11-4, (6))** from the gear housing **(Figure 11-4, (7))**.
4. Pull the brush springs up using a brush spring puller. On the negative (-) side, bring the brush spring into contact with the side of the brush for lifting from the commutator surface. On the positive (+) side, remove the brush from the brush holder assembly **(Figure 11-5, (1))**.

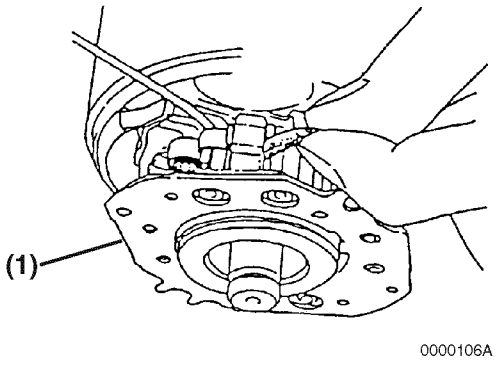

Figure 11-5

5. Remove the brush holder assembly **(Figure 11-6, (1))** from the armature assembly **(Figure 11-6, (3))**.

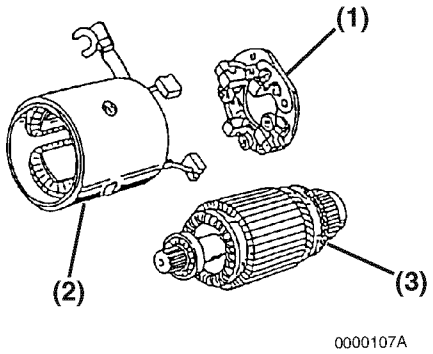

Figure 11-6

6. Pull the armature assembly **(Figure 11-6, (3))** out from the field coil assembly **(Figure 11-6, (2))**.
7. Remove the two M6 bolts **(Figure 11-7, (1))** retaining the magnetic switch assembly **(Figure 11-7, (2))** to the gear housing. Remove the magnetic switch assembly, dust cover(s) **(Figure 11-7, (3))** and torsion spring **(Figure 11-7, (4))** from the gear housing.

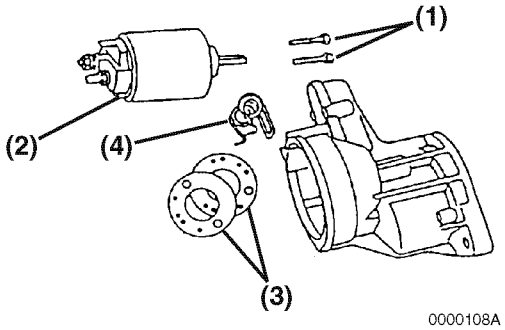

Figure 11-7

8. Disassemble the dust cover **(Figure 11-8, (3))** and shift the lever **(Figure 11-8, (4))** from the gear housing.

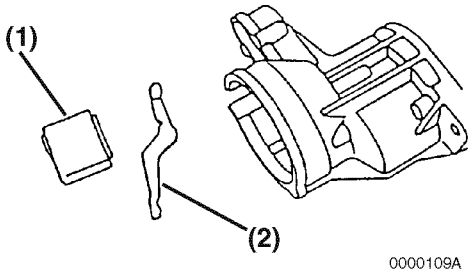

Figure 11-8

9. Remove the three M4 bolts **(Figure 11-9, (1))** securing the bearing retainer assembly **(Figure 11-9, (2))** to the gear housing. Remove the bearing retainer assembly from the gear housing.

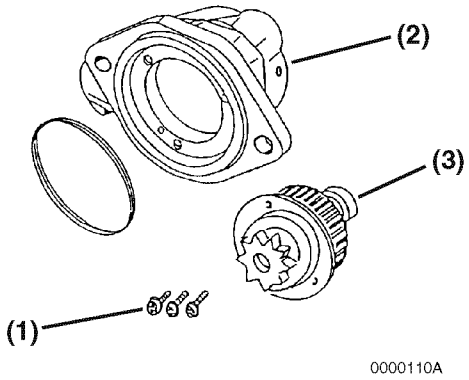

Figure 11-9

10. Remove the pinion clutch assembly **(Figure 11-9, (3))** from the bearing retainer assembly.
11. Using a flat-blade screwdriver, remove the retaining ring **(Figure 11-10, (1))** from the shaft of the pinion.

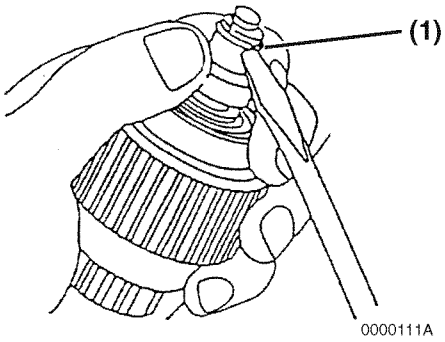

Figure 11-10

12. Disassemble the pinion stop **(Figure 11-11, (3))**, return spring **(Figure 11-11, (4))**, pinion clutch assembly **(Figure 11-11, (1))**, and pinion shaft **(Figure 11-11, (5))**.

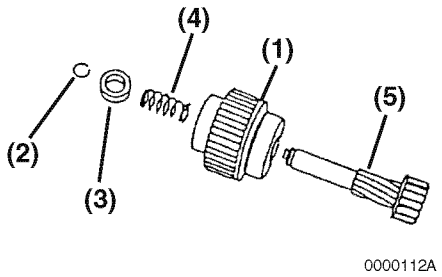

Figure 11-11

Cleaning and Inspection

Armature

Commutator Surface Inspection

If the commutator surface is rough, polish the surface with a #500 to #600 emery cloth **(Figure 11-12)**.

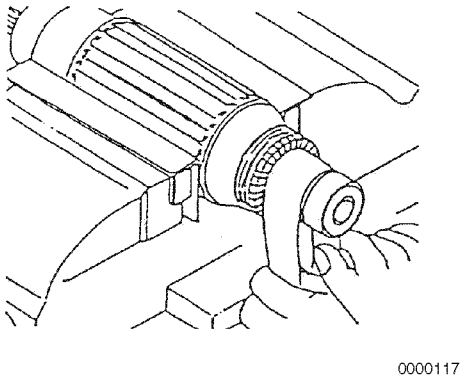

Figure 11-12

Measure Commutator Outside Diameter

Measure the commutator outside diameter **(Figure 11-13)**. Replace the armature if the measurement is less than the limit.

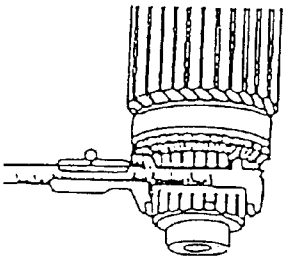

0000113

Figure 11-13

See Starter Motor Specifications on page 11-7 for the service limit.

Measure Commutator Insulation Depth

Measure the depth of the insulating material **(Figure 11-14, (1))** between commutator segments **(Figure 11-14, (2))**. If the depth measures less than the limit, use a hacksaw blade **(Figure 11-14, (3))** to remove the insulating material until the depth is within the limit.

A normal commutator condition is indicated in **(Figure 11-14, (4))**. An abnormal commutator condition is indicated in **(Figure 11-14, (5))**.

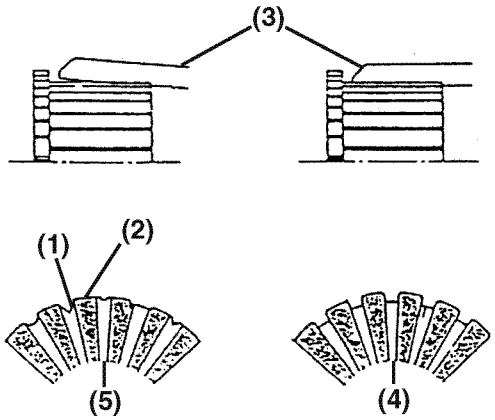

0000118

Figure 11-14

See Starter Motor Specifications on page 11-7 for the service limit.

Armature Coil Continuity Test

Check for continuity between the commutator segments using a multimeter **(Figure 11-15)**. The multimeter should indicate continuity.

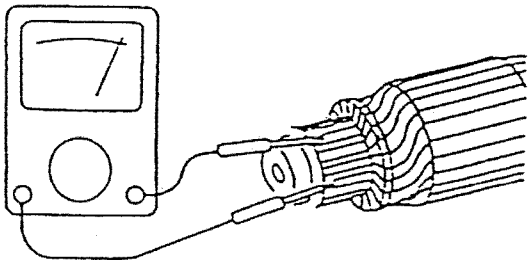

0000114

Figure 11-15

If the multimeter does not indicate continuity, replace the armature.

Armature Coil Insulation Test

Check for continuity between a commutator segment and the shaft or armature using a multimeter **(Figure 11-16)**. The multimeter should not indicate continuity.

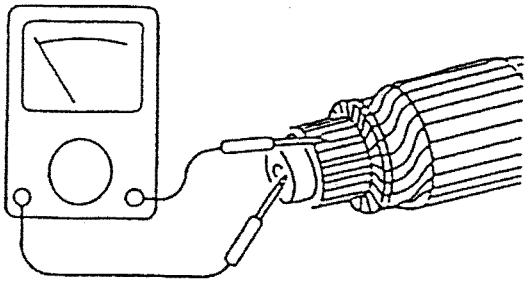

0000115

Figure 11-16

If the multimeter indicates continuity, replace the armature.

Measure Armature and Commutator Run-Outs

Measure the armature core run-out and the commutator run-out using a dial indicator **(Figure 11-17)**. Replace the armature if either of the measurements is less than the limit.

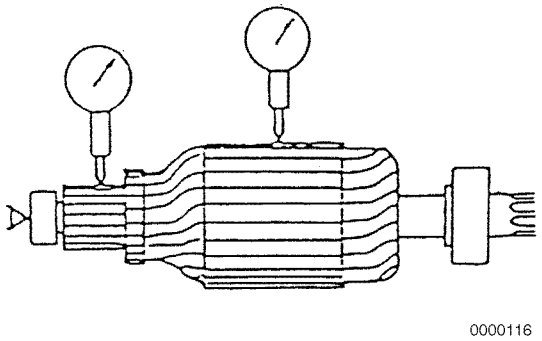

Figure 11-17

See Starter Motor Specifications on page 11-7 for the service limit.

Field Coil

Field Coil Continuity Test

Check for continuity between the field coil terminals using a multimeter **(Figure 11-18)**. The multimeter should indicate continuity.

If the multimeter does not indicate continuity, replace the field coil assembly.

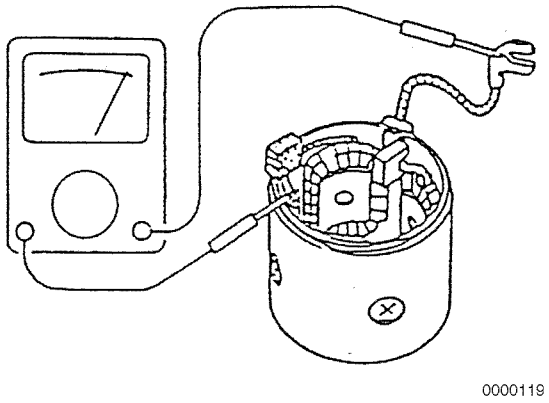

Figure 11-18

Field Coil Insulation Test

Check for continuity between the field coil terminal and the yoke using a multimeter **(Figure 11-19)**. The multimeter should not indicate continuity.

If the multimeter indicates continuity, replace the field coil assembly.

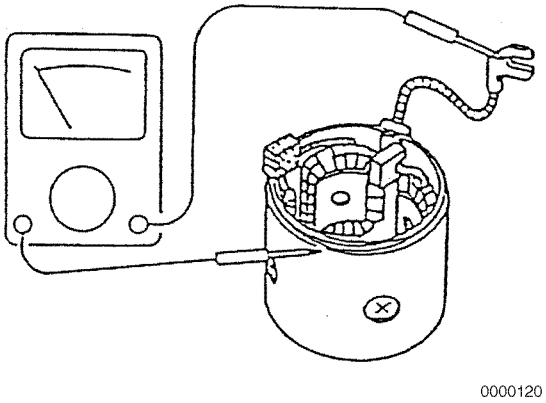

Figure 11-19

Measure Brush Length

Measure the length of the brush **(Figure 11-20)**. Replace the brush if the length is less than the limit.

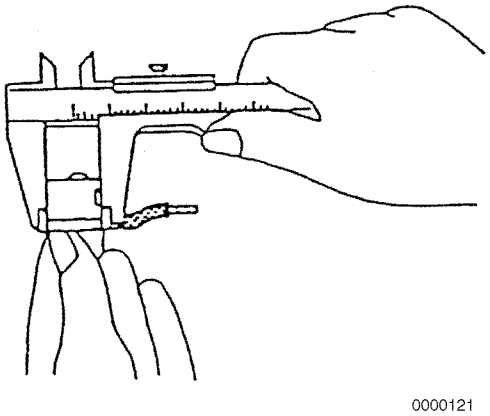

Figure 11-20

See Starter Motor Specifications on page 11-7 for the service limit.

Magnetic Switch

If the starter motor becomes wet, replace the magnetic switch even if the magnetic switch assembly function is normal.

Shunt Coil Continuity Test

Check for continuity between the "S" terminal and the switch body using a multimeter **(Figure 11-21)**. The multimeter should indicate continuity.

If the multimeter does not indicate continuity, replace the magnetic switch.

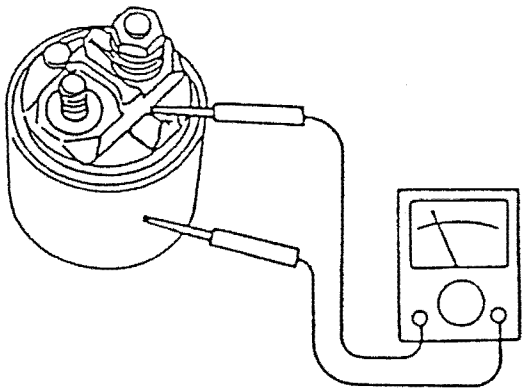

Figure 11-21

Series Coil Continuity Test

Check for continuity between the "S" and "M" terminals using a multimeter **(Figure 11-22)**. The multimeter should indicate continuity.

If the multimeter does not indicate continuity, replace the magnetic switch.

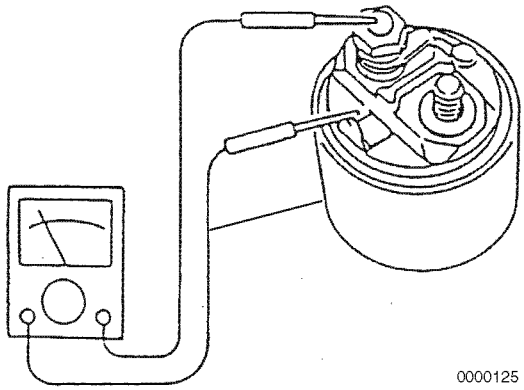

Figure 11-22

Coil Resistance Test

See Starter Motor Specifications on page 11-7 for the service limit.

Contact Continuity Test

Depress the plunger at the bottom of the magnetic switch. Check for continuity between the “B” and “M” terminals using a multimeter **(Figure 11-23)**. The multimeter should indicate continuity.

If the multimeter does not indicate continuity, replace the magnetic switch.

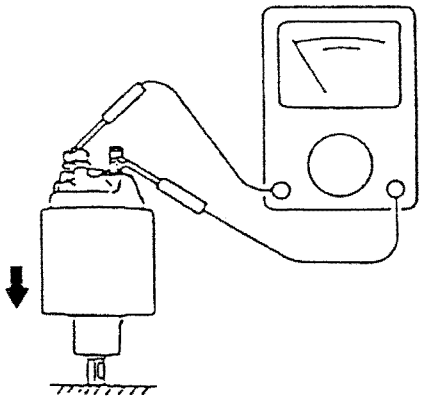

0000126

Figure 11-23

Pinion Clutch Assembly

Pinion Clutch Assembly Inspection

Manually rotate the pinion clutch assembly in the drive direction **(Figure 11-24)**. It should rotate freely in the drive direction and is locked by turning it in the opposite direction. Replace the pinion clutch assembly if the results are different.

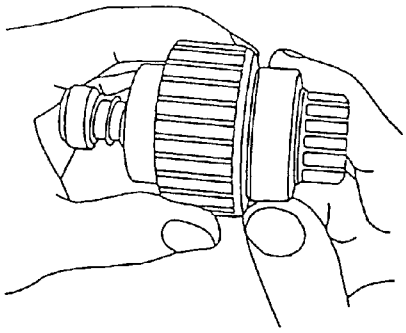

0000127

Figure 11-24

Slide the pinion clutch assembly on the shaft. It should slide smoothly on the shaft **(Figure 11-25)**. Rust, too much grease or damage could prevent the pinion clutch from sliding smoothly. If the pinion clutch assembly does not slide smoothly, clean the shaft and pinion clutch assembly or replace the damaged component.

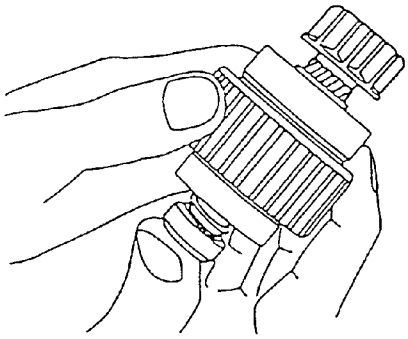

0000128

Figure 11-25

Ball Bearing Inspection

Rotate each ball bearing while holding the pinion clutch assembly **(Figure 11-26)**. Replace the ball bearing if it does not rotate smoothly or has excessive play.

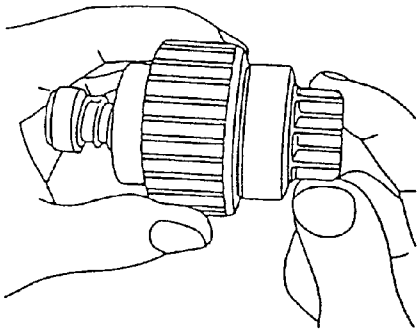

0000129

Figure 11-26

Reassembly of Starter Motor

1. Apply the appropriate starter bendix grease (obtain locally) to the pinion shaft. Reassemble the pinion shaft **(Figure 11-27, (5))**, pinion clutch assembly **(Figure 11-27, (1))**, return spring **(Figure 11-27, (4))** and pinion stop **(Figure 11-27, (3))**. Reinstall the retaining ring **(Figure 11-27, (2))** in the groove in the pinion shaft. Slide the piston stop over the retaining ring.

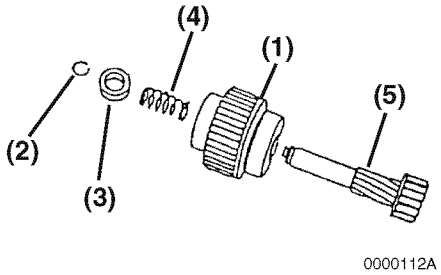

Figure 11-27

2. Reinstall the pinion clutch assembly into the bearing retainer assembly.
3. Reinstall the bearing retainer assembly and pinion assembly to the gear housing. Reinstall and tighten the three M4 bolts.
4. Apply a small amount of high temperature lithium grease (obtain locally) to the sliding portions of the shift lever **(Figure 11-28, (1))**. Reassemble the torsion spring **(Figure 11-28, (2))**, shift lever and dust cover(s) **(Figure 11-28, (3))**, plunger **(Figure 11-28, 4)** and magnetic switch assembly **(Figure 11-28, (5))**.

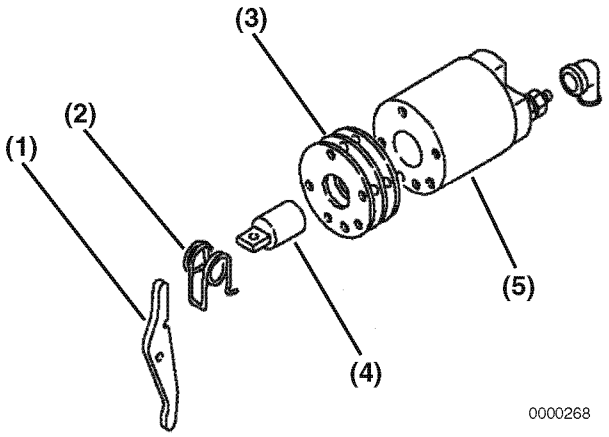

Figure 11-28

5. Reassemble the magnetic switch assembly to the gear housing. Pry the pinion away from the gear housing to allow installation of the magnetic switch assembly **(Figure 11-29)**.

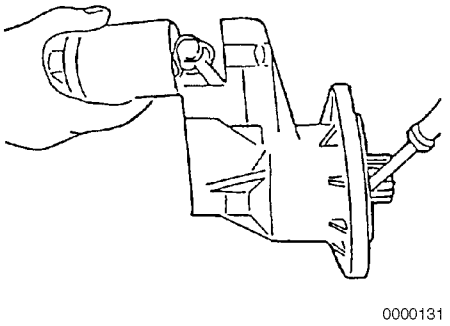

Figure 11-29

6. Secure the magnetic switch assembly to the gear housing using the two M6 bolts.

7. Carefully install the armature assembly **(Figure 11-30, (1))** into the field coil assembly **(Figure 11-30, (2))**.

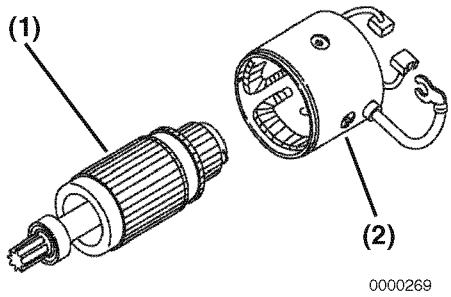

Figure 11-30

8. Position the brush springs in brush holders **(Figure 11-31)**. Reinstall the brushes in the brush holders. Reversing the brushes will cause the starter motor to turn backwards.

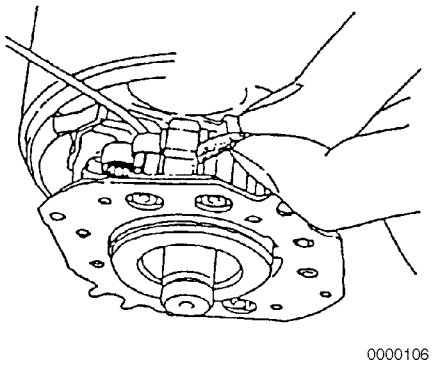

Figure 11-31

9. Carefully install the brush holder assembly to the armature assembly.
10. Reinstall the field coil assembly with the armature assembly to the gear housing.
11. Reinstall the rear cover to the brush holder assembly. Securely tighten the two bolts.
12. Reinstall the two M4 through bolts **(Figure 11-32)**. Securely tighten the through bolts. Reconnect the wire to the magnetic switch assembly. Tighten the M8 nut. Reinstall the cover over the connection.

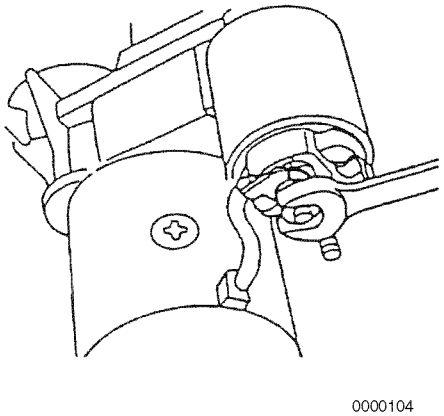

Figure 11-32

Check Pinion Projection Length

1. Connect the positive (+) lead from a battery to the “S” terminal.
2. Connect the negative (-) lead to the “M” terminal.
3. Lightly pull the pinion away from the gear housing.
4. Turn the switch ON and measure the pinion moving distance L in the thrust direction **(Figure 11-33)**. Perform this test within 10 seconds. *See Starter Motor Specifications on page 11-7 for the service limit.*

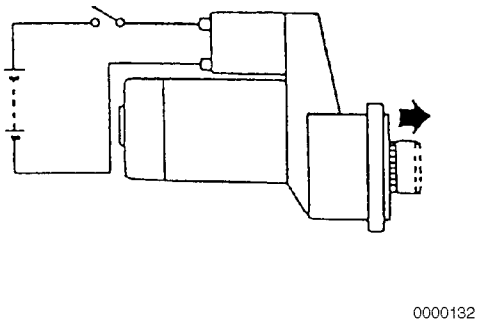

Figure 11-33

5. If the measured L dimension is outside the standard range, adjust the dust covers to obtain the standard range. Dust covers **(Figure 11-34, (1))** are available in 0.020 in (0.5 mm) and 0.031 in (0.8 mm) thicknesses.

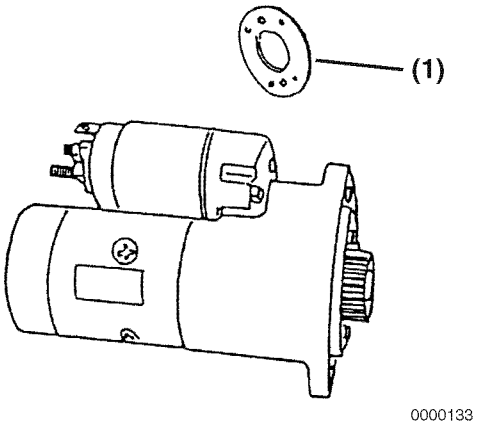

Figure 11-34

No-Load Test

Test the characteristics of the starter motor by performing a no-load test.

CAUTION

The starter motor can be damaged if operated continuously longer than 10 seconds while performing the no-load test.

0000034en

1. Secure the starting motor in a vise or other suitable fixture.
2. Connect an ammeter **(Figure 11-35, (1))** in series between the battery positive (+) terminal **(Figure 11-35, (2))** and the main positive (+) terminal **(Figure 11-35, (3))** on the starter motor.

Note: The ammeter and all wire leads used in this test must have a capacity equal to or greater than the amperage draw specification for the starter motor being tested.

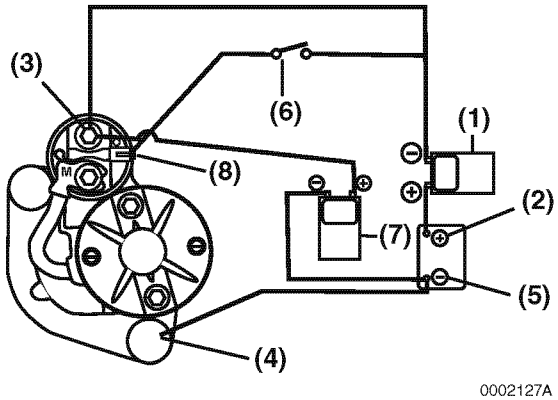

Figure 11-35

3. Connect a wire lead between the mounting base of the starter motor **(Figure 11-35, (4))** and the battery negative terminal **(Figure 11-35, (5))**.
4. Connect a voltmeter **(Figure 11-35, (7))** to the battery negative (-) terminal **(Figure 11-35, (5))** and the main positive (+) battery terminal **(Figure 11-35, (3))** on the starter motor.
5. Install a switch **(Figure 11-35, (6))** in a circuit between the battery positive (+) terminal **(Figure 11-35, (2))** and the starter magnetic switch (solenoid) terminal **(Figure 11-35, (8))** on the starter motor.
6. Use a suitable tachometer to monitor the rpm of the starter.
7. Turn the switch to the ON position. Monitor the rpm, amperage draw and voltage. For test specifications, *see 3TNV82A to 4TNV88 - Standard and Optional and 4TNV94L to 4TNV106T - Standard and Optional on page 11-5 for the appropriate starter motor.*

Installation of Starter Motor

1. Reinstall the starter motor to the flywheel housing.
2. Reinstall the starter mounting bolts **(Figure 11-36, (1))**. Tighten the bolts to specification. *See Tightening Torques for Standard Bolts and Nuts on page 4-46.*

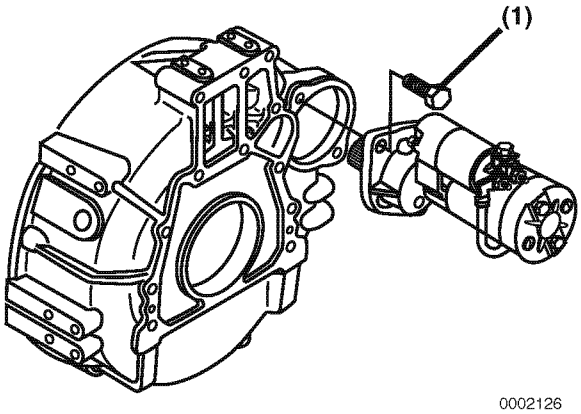

Figure 11-36

3. Reconnect the electrical wires to the magnetic switch assembly (solenoid). Be sure to place the cover over the battery positive (+) cable connection.
4. Reconnect the battery cables at the battery.

Section 12

ALTERNATOR

Page

Before You Begin Servicing 12-3
Introduction 12-6
Dynamo and Alternator Information 12-6
3TNV82A to 4TNV106T - Standard and Optional Dynamos ... 12-6
3TNV82A to 4TNV106T - Standard and Optional Alternators. 12-6
Alternator Specifications 12-7
Dynamo Specifications 12-7
Alternator Troubleshooting 12-8
Alternator Components 12-9
Alternator Wiring Diagram 12-10
Alternator Standard Output 12-11
Alternator 12-12
Removal of Alternator 12-12
Disassembly of Alternator 12-12
Reassembly of Alternator 12-14
Installation of Alternator 12-16
Dynamo Component Location 12-17
Dynamo Wiring Diagram 12-18
Operation of Dynamo 12-18
Dynamo Standard Output 12-19
Testing of Dynamo 12-20
Testing Stator Coil Continuity 12-20
Testing Stator Coil Short-to-Ground 12-20
Testing Dynamo Regulated Output 12-20

Dynamo 12-20
Removal of Dynamo 12-20
Disassembly of Dynamo 12-21
Reassembly of Dynamo 12-21
Installation of Dynamo 12-22

BEFORE YOU BEGIN SERVICING

⚠ WARNING

ENTANGLEMENT HAZARD!

- Stop the engine before you begin to service it.
- NEVER leave the key in the key switch when you are servicing the engine. Someone may accidentally start the engine and not realize you are servicing it. This could result in a serious injury.
- If you must service the engine while it is operating, remove all jewelry, tie back long hair, and keep your hands, other body parts and clothing away from moving / rotating parts.
- Failure to comply could result in death or serious injury.

0000010en

⚠ WARNING

SHOCK HAZARD!

- Turn off the battery switch (if equipped) or disconnect the negative battery cable before servicing the electrical system.
- Check the electrical harnesses for cracks, abrasions, and damaged or corroded connectors. ALWAYS keep the connectors and terminals clean.
- Failure to comply could result in death or serious injury.

0000009en

⚠ WARNING

BURN HAZARD!

- Keep your hands and other body parts away from hot engine surfaces such as the muffler, exhaust pipe, turbocharger (if equipped) and engine block during operation and shortly after you shut the engine down. These surfaces are extremely hot while the engine is operating and could seriously burn you.
- Failure to comply could result in death or serious injury.

0000015en

⚠ WARNING

FUME / BURN HAZARD!

- Always read and follow safety related precautions found on containers of hazardous substances like parts cleaners, primers, sealants and sealant removers.
- Failure to comply could result in death or serious injury.

0000014en

⚠ CAUTION

FLYING OBJECT HAZARD!

- ALWAYS wear eye protection when servicing the engine and when using compressed air or high-pressure water. Dust, flying debris, compressed air, pressurized water or steam may injure your eyes.
- Failure to comply may result in minor or moderate injury.

0000003en

⚠ CAUTION

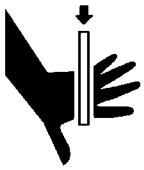

PINCH HAZARD!

Carefully rotate the alternator toward the cylinder block while loosening the V-belt. Failure to comply may result in minor or moderate injury.

0000014en

CAUTION

NEVER permit anyone to operate the engine or driven machine without proper training.

- Read and understand this Operation Manual before you operate or service the machine to ensure that you follow safe operating practices and maintenance procedures.
- Machine safety signs and labels are additional reminders for safe operating and maintenance techniques.
- See your authorized Yanmar industrial engine dealer or distributor for additional training.

0000002en

CAUTION

Do not short-circuit the charging system between alternator terminals IG and L. Damage to the alternator will result.

0000035en

CAUTION

Do not connect a load between alternator terminals L and E. Damage to the alternator will result.

0000036en

CAUTION

Do not remove the positive (+) battery cable from alternator terminal B while the engine is operating. Damage to the alternator will result.

0000037en

CAUTION

Do not turn the battery switch OFF while the engine is operating. Damage to the alternator will result.

0000038en

CAUTION

Do not operate the engine if the alternator is producing unusual sounds. Damage to the alternator will result.

0000039en

CAUTION

Do not reverse the positive (+) and negative (-) ends of the battery cable. The alternator diode and stator coil will be damaged.

0000050en

CAUTION

When the battery indicator goes out, it should not come on again. The battery indicator only comes on during operation if the alternator fails. However, if an LED is used in the battery indicator, the LED will shine faintly during normal operation.

0000051en

CAUTION

Using a non-specified V-belt will cause inadequate charging and shorten the belt life. Use the specified belt.

0000052en

CAUTION

Agricultural or other chemicals, especially those with a high sulfur content, can adhere to the IC regulator. This will corrode the conductor and result in battery over-charging (boiling) and charging malfunctions. Consult Yanmar before using the equipment in such an environment or the warranty is voided.

0000053en

CAUTION

Do not use a high-pressure wash directly on the alternator. Water will damage the alternator and result in inadequate charging.

0000049en

INTRODUCTION

This section of the *Service Manual* describes the servicing of the dynamos and alternators. Yanmar Part No. 129423-77200 alternator is used in this section to show the service procedures for the representative alternator. Yanmar Part No. 171301-77201 dynamo is used in this section to show the service procedures for the representative dynamo. For specific part detail, see the *Parts Catalog* for the engine you are working on.

DYNAMO AND ALTERNATOR INFORMATION

3TNV82A to 4TNV106T - Standard and Optional Dynamos

YANMAR Part Number	Mfg.	Mfg. Part Number	Specification
171301-77201	Kokusan	GP8138	DC12V-15A
119910-77200	Kokusan	GP9191	DC12V-20A

3TNV82A to 4TNV106T - Standard and Optional Alternators

YANMAR Part Number	Mfg.	Mfg. Part Number	Specification
119620-77201	Denso	100211-4531	DC12V-40A
129423-77200	Denso	101211-1170	DC12V-40A with Pulse
129961-77200	Denso	101211-2591	DC12V-55A
119626-77210	Denso	101211-2951	DC12V-55A with Pulse
129612-77290	Hitachi	LR180-772	DC12V-80A with Pulse
129900-77240	Hitachi	LR235-705	DC24V-35A with Pulse

ALTERNATOR SPECIFICATIONS

Yanmar Part Number	129423-77200
Nominal Output (13.5 Volts Heat)	40 Amps
Weight	6.17 lb (2.8 kg)
Revolution Direction (As Viewed From Pulley)	Clockwise
Rating	Continuous
Battery Voltage	12 Volts
Rated Revolution	5000 rpm (min^{-1})
Operating Range	1350 - 18000 rpm (min^{-1})
Grounding Characteristics	Negative (-) Side of Circuit
Integrated Regulator	IC Regulator
Outside Diameter of Pulley	2.724 in. (69.2 mm)
Belt Shape	Type A

DYNAMO SPECIFICATIONS

Yanmar Part Number		119910-77200
Nominal Output		20 Amps
Weight		3.97 lb (1.8 kg)
Revolution Direction (As Viewed From Pulley)		Clockwise
Rating		Continuous
Battery Voltage		12 Volts
Rated Revolution		3500 rpm
Operating Range		1400 - 6600 rpm
Grounding Characteristics		Negative (-) Side of Circuit
Regulator		Current Limiter (Yanmar Part No. 119653-77710)
Outside Diameter of Pulley	A-Belt	2.56 in. (65 mm)
	Special M-Belt	2.28 in. (58 mm)
Belt Shape		Type A or Type Special M

ALTERNATOR TROUBLESHOOTING

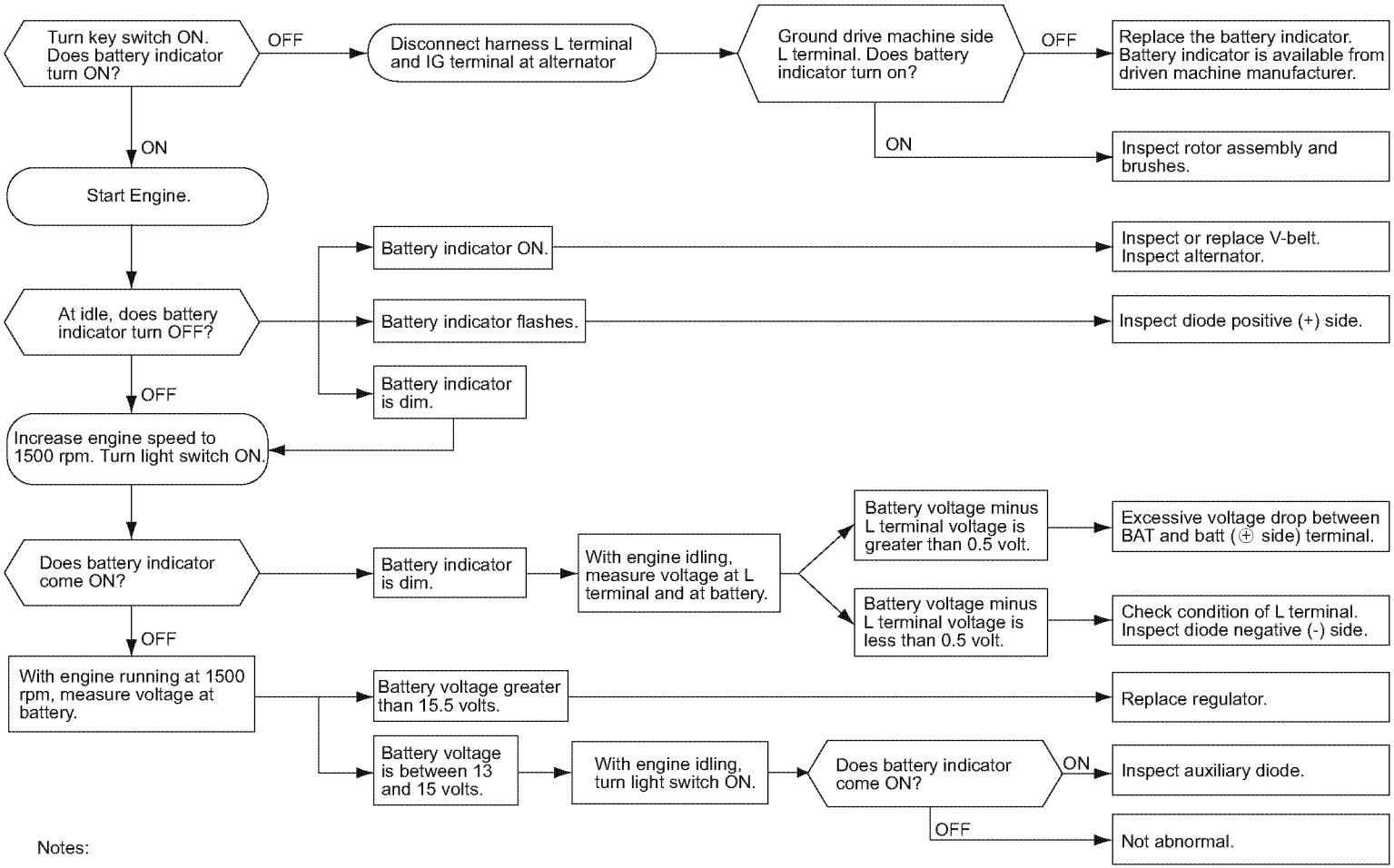

Notes:

1) Use a fully charged battery
2) DC voltmeter: 0 to 30 V, 0.5 class
3) The check method is also applicable to the bench test

ALTERNATOR COMPONENTS

Yanmar Part No. 129423-77200 alternator is used in this section to show the service procedures for the representative alternator. For specific part detail, see the *Parts Catalog* for the engine you are working on.

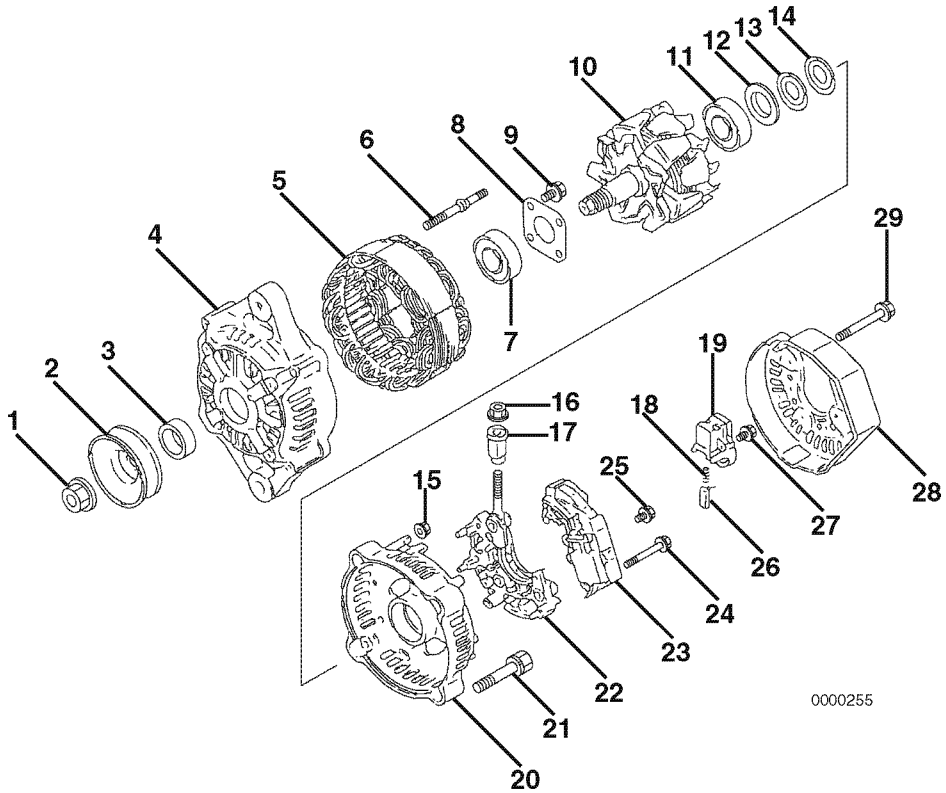

1 – Nut
2 – Pulley
3 – Collar
4 – Front Frame Housing
5 – Stator Assembly
6 – Stud (2 used)
7 – Front Frame Housing Bearing
8 – Bearing Cover
9 – Bearing Cover Bolt (4 used)
10 – Rotor Assembly
11 – Rear Frame Housing Bearing
12 – Bearing Cover
13 – Thrust Washer
14 – Thrust Washer
15 – Nut (2 used)
16 – Nut
17 – Insulation Bushing
18 – Spring (2 used)
19 – Brush Holder
20 – Rear Frame Housing
21 – Bolt (2 used)
22 – Holder
23 – IC Regulator Assembly
24 – Bolt (2 used)
25 – Bolt
26 – Brush (2 used)
27 – Bolt
28 – Rear Cover
29 – Bolt (3 used)

Figure 12-1

ALTERNATOR WIRING DIAGRAM

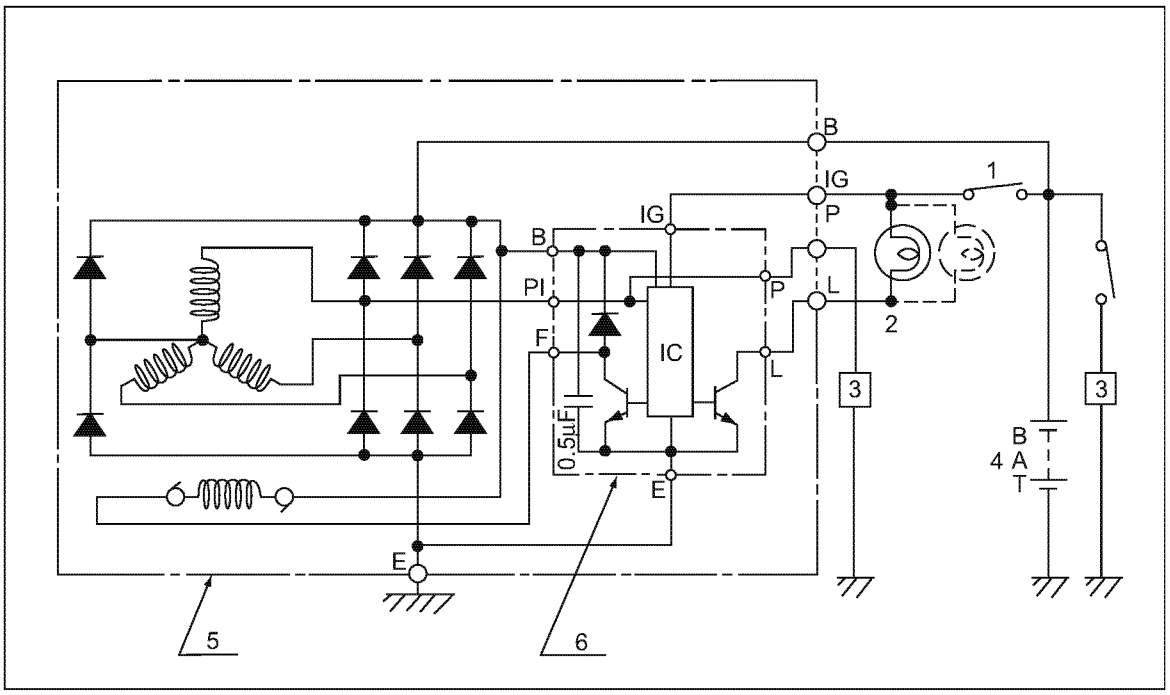

1 – Key Switch
2 – Charge Lamp (3.4 Watts Max.)
3 – Load
4 – Battery
5 – Alternator Assembly
6 – IC Regulator Assembly

Figure 12-2

CAUTION

Do not short-circuit the charging system between alternator terminals IG and L. Damage to the alternator will result.

0000035en

CAUTION

Do not connect a load between alternator terminals L and E. Damage to the alternator will result.

0000036en

CAUTION

Do not remove the positive (+) battery cable from alternator terminal B while the engine is operating. Damage to the alternator will result.

0000037en

ALTERNATOR STANDARD OUTPUT

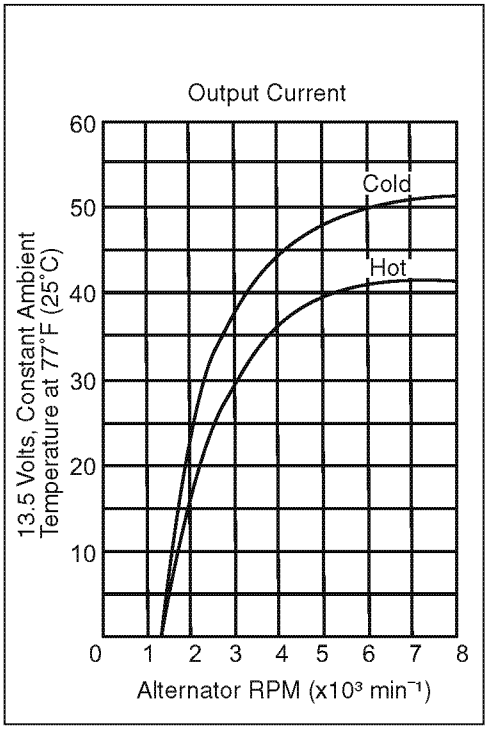

Figure 12-3

ALTERNATOR

⚠ WARNING

SHOCK HAZARD!

- **Turn off the battery switch (if equipped) or disconnect the negative battery cable before servicing the electrical system.**
- **Check the electrical harnesses for cracks, abrasions, and damaged or corroded connectors. ALWAYS keep the connectors and terminals clean.**
- **Failure to comply could result in death or serious injury.**

0000009en

Removal of Alternator

1. Disconnect the electrical wires from the alternator.
2. Loosen the V-belt.

⚠ CAUTION

PINCH HAZARD!

Carefully rotate the alternator toward the cylinder block while loosening the V-belt. Failure to comply may result in minor or moderate injury.

0000014en

3. Remove the V-belt adjuster from the alternator bolt **(Figure 12-4, (1))**.
4. Remove the nut **(Figure 12-4, (2))** from the gear case stud. Remove the alternator.

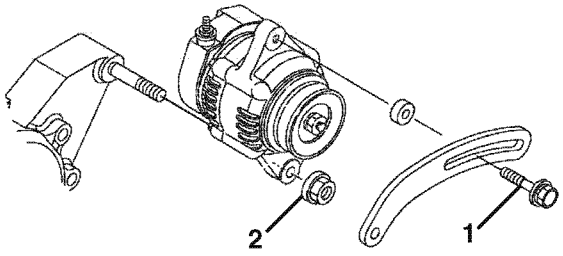

0000264

Figure 12-4

Disassembly of Alternator

1. Remove the nut **(Figure 12-5, (1))** from the shaft of the rotor assembly. Remove the pulley **(Figure 12-5, (2))**.

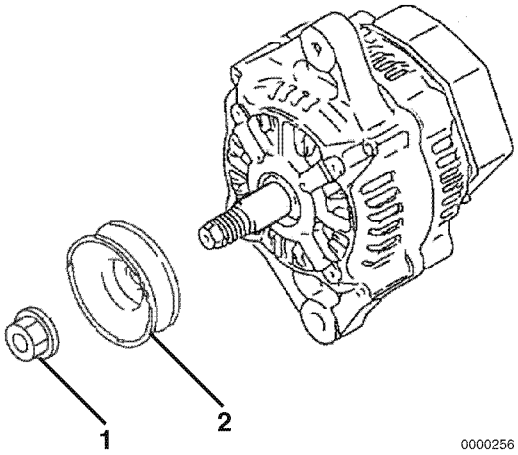

0000256

Figure 12-5

2. Remove the three bolts **(Figure 12-6, (1))** retaining the rear cover **(Figure 12-6, (2))** to the rear frame assembly.

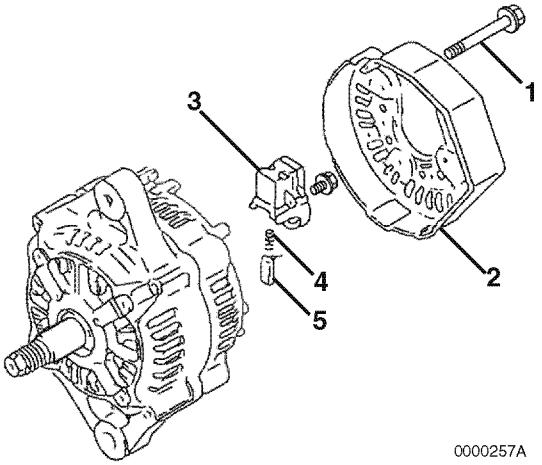

Figure 12-6

3. Remove the brush holder **(Figure 12-6, (3))**. Remove the brush springs **(Figure 12-6, (4))** and brushes **(Figure 12-6, (5))**.
4. Remove the bolt retaining the regulator assembly **(Figure 12-7, (1))** to the holder **(Figure 12-7, (2))**.

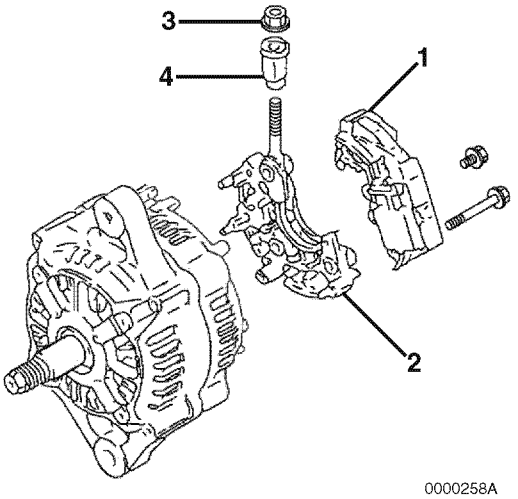

Figure 12-7

5. Remove the bolts retaining the holder **(Figure 12-7, (2))** to the rear frame housing. Remove the holder.
6. Remove the nut **(Figure 12-7, (3))** retaining the insulation bushing **(Figure 12-7, (4))**. Remove the insulation bushing.
7. Remove the two bolts **(Figure 12-8, (1))** and two nuts **(Figure 12-8, (2))** securing the rear frame housing to the front frame housing.

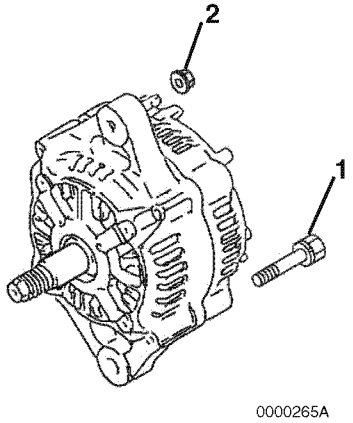

Figure 12-8

8. Using a press, remove the rotor assembly **(Figure 12-9, (1))** from the front frame housing **(Figure 12-9, (2))** and rear frame housing **(Figure 12-9, (1))**.

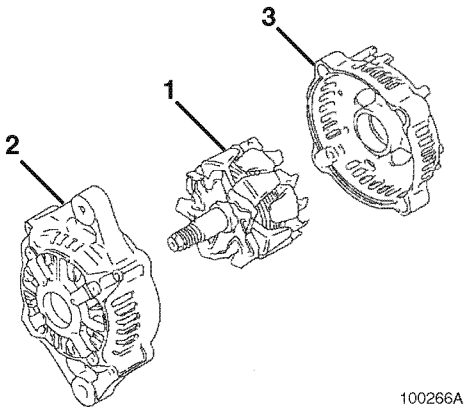

Figure 12-9

9. Remove the stator assembly **(Figure 12-10, (1))** from the front frame housing.

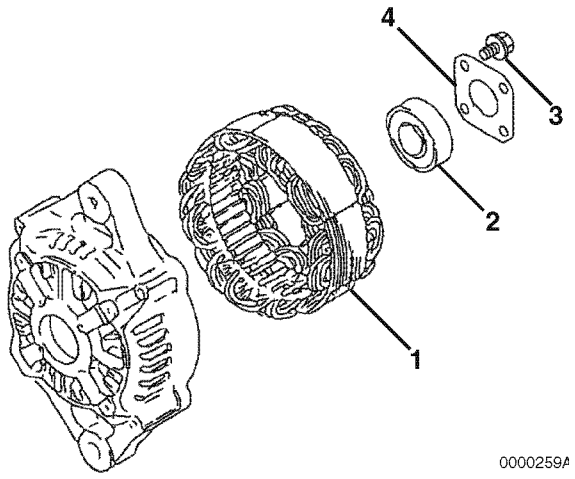

Figure 12-10

10. If it is necessary to replace the bearing **(Figure 12-10, (2))** in the front frame housing, remove the four bolts **(Figure 12-10, (3))** securing the plate **(Figure 12-10, (4))** to the front frame housing. Remove the plate. Use a puller to remove the bearing. Discard the bearing.
11. If it is necessary to replace the bearing **(Figure 12-11, (1))** in the rear frame housing, use a puller to remove. Discard the bearing. Remove the bearing cover **(Figure 12-11, (2))** and two thrust washers **(Figure 12-11, (3))**.

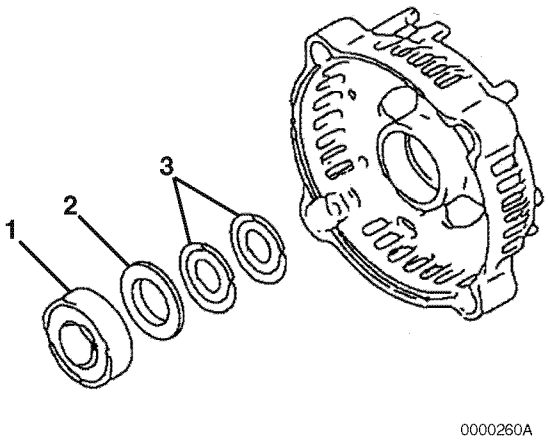

Figure 12-11

Reassembly of Alternator

1. If removed, reinstall the two trust washers **(Figure 12-12, (3))** and bearing cover **(Figure 12-12, (2))** in the rear frame housing. Lubricate the outside diameter of a new bearing **(Figure 12-12, (1))**. Press the bearing into the rear frame housing.

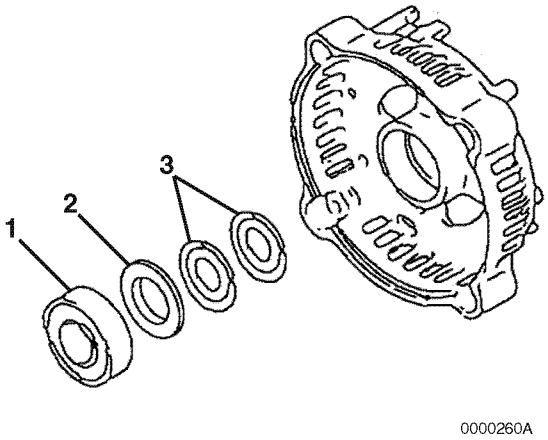

Figure 12-12

2. If removed, lubricate the outside diameter of a new front frame housing bearing. Press the bearing **(Figure 12-13, (2))** into the front frame housing. Reinstall the plate **(Figure 12-13, (4))** to the front housing. Tighten the four bolts **(Figure 12-13, (3))**.

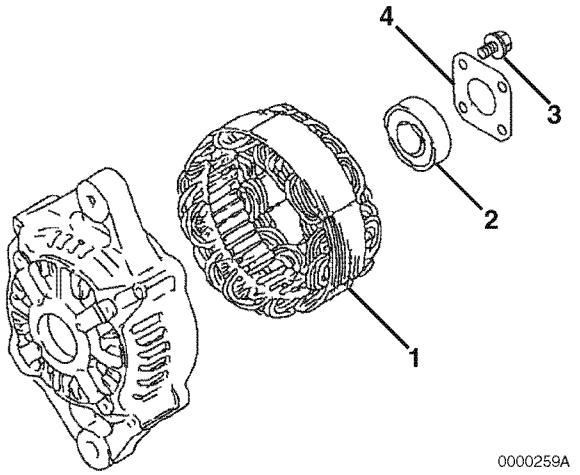

Figure 12-13

3. Position the stator assembly **(Figure 12-13, (1))** on the front frame housing studs.
4. Lubricate the shaft of the rotor assembly **(Figure 12-14, (1))**. Press the rotor assembly into the front frame housing **(Figure 12-14, (2))** and rear frame housing **(Figure 12-14, (3))**.

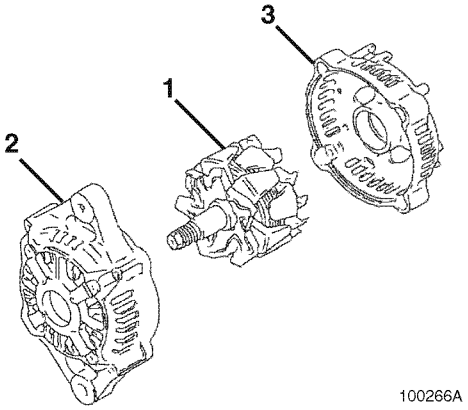

Figure 12-14

5. Align the front frame housing with the rear frame housing. Reinstall the two bolts **(Figure 12-15, (1))** and two nuts **(Figure 12-15, (2))**.

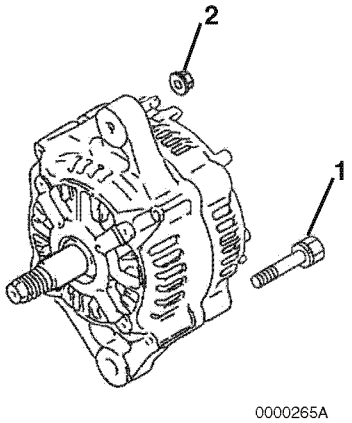

Figure 12-15

6. Reinstall the insulation bushing **(Figure 12-16, (4))** and nut **(Figure 12-16, (3))**.

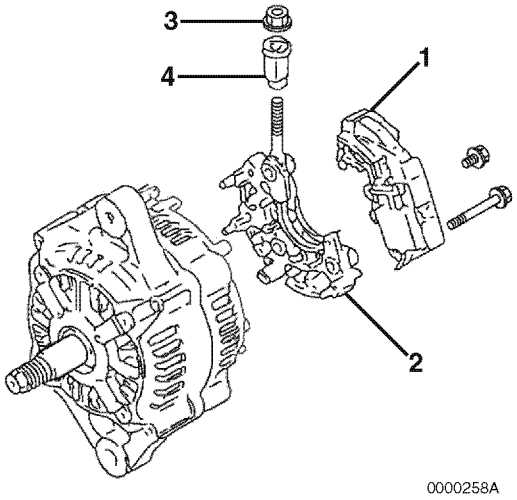

Figure 12-16

7. Reassemble the regulator assembly **(Figure 12-16, (1))** to the holder **(Figure 12-16, (2))**.

8. Reinstall the brush holder **(Figure 12-17, (3))**, springs **(Figure 12-17, (4))** and brushes **(Figure 12-17, (5))**.
9. Reattach the regulator assembly and holder to the rear frame housing.

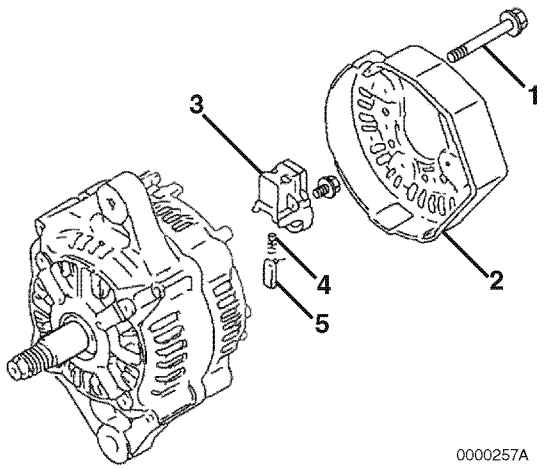

Figure 12-17

10. Reinstall the rear cover **(Figure 12-17, (2))** to the rear frame housing with three bolts **(Figure 12-17, (1))**.
11. Reassemble the pulley **(Figure 12-18, (2))** and nut **(Figure 12-18, (1))** to the shaft of the rotor assembly. Tighten the nut.

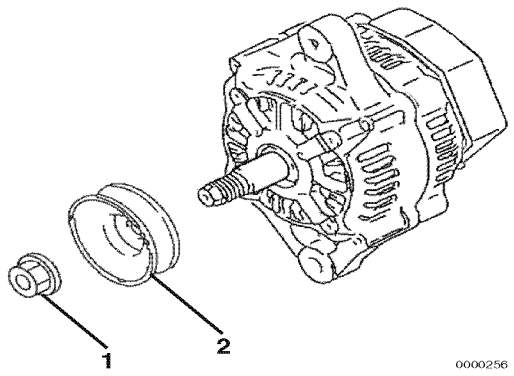

Figure 12-18

Installation of Alternator

1. Position the alternator on the gear case. Loosely reinstall the nut **(Figure 12-19, (2))** on the gear case stud and the V-belt adjuster bolt **(Figure 12-19, (1))**.

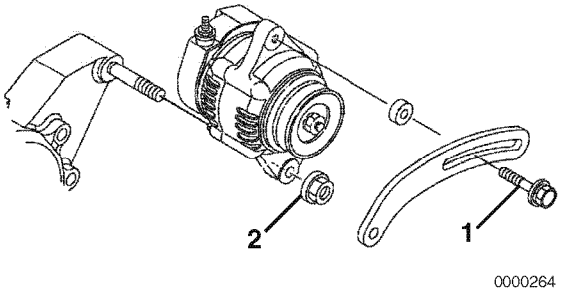

Figure 12-19

2. Reconnect the electrical wires to the alternator. Tighten the nuts to 15 - 20 in.-lb (1.7 - 2.3 N·m; 17-23 kgf·m).
3. Reinstall the V-belt. Tighten the V-belt to the proper tension as described in *Check and Adjust Cooling Fan V-Belt on page 5-22.*
4. Start the engine. Listen for any unusual sounds from the alternator.

CAUTION

Do not operate the engine if the alternator is producing unusual sounds. Damage to the alternator will result.

0000039en

5. Verify that the charge indicator is ON while the engine is operating. If the charge indicator is not ON, repair the problem before operating the engine.

DYNAMO COMPONENT LOCATION

Yanmar Part No. 171301-77201 dynamo is used in this section to show the service procedures for the representative dynamo. For specific part detail, see the *Parts Catalog* for the engine you are working on.

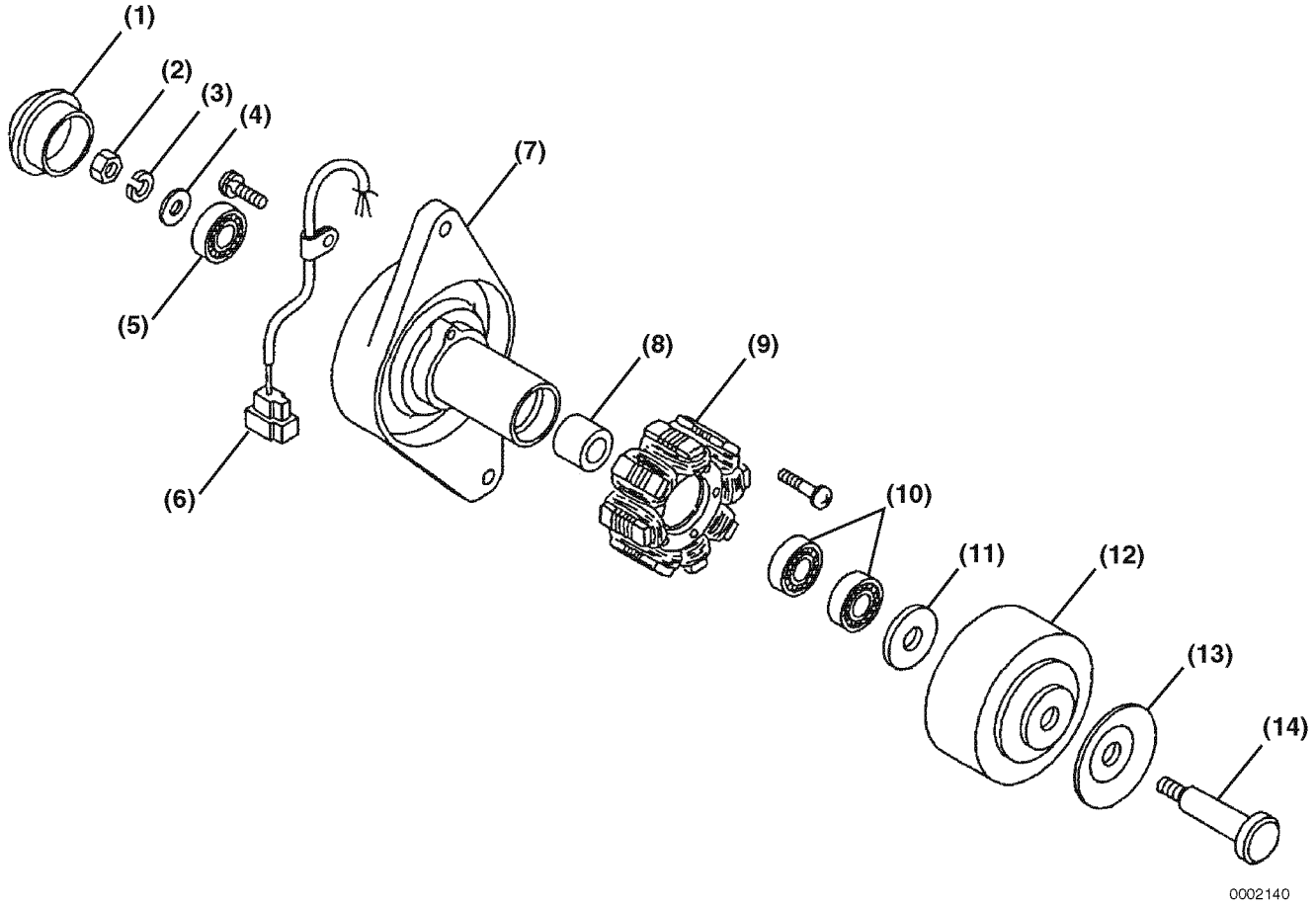

1 – Rear Cover
2 – Nut
3 – Lock Washer
4 – Flat Washer
5 – Rear Bearing
6 – Output Wire and Connector
7 – Plate
8 – Spacer
9 – Stator Assembly
10 – Front Bearing (2 used)
11 – Flat Washer
12 – Flywheel Assembly
13 – Pulley Half
14 – Through Bolt

Figure 12-20

DYNAMO WIRING DIAGRAM

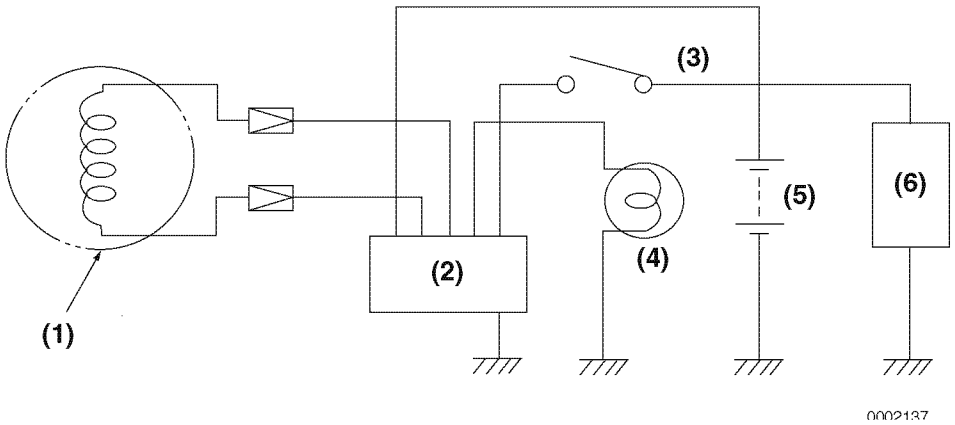

1 – Dynamo
2 – Current Limiter
3 – Key Switch
4 – Charge Lamp (3.4 Watts Max.)
5 – Battery
6 – Load

Figure 12-21

OPERATION OF DYNAMO

The dynamo consists of a series of permanent magnets that rotate around a stationary stator coil. The magnets are attached to the flywheel which is rotated via the engine cooling fan drive belt. The resultant output is an AC (alternating current) signal. The AC is converted to DC (direct current) by the current limiter. The current limiter outputs charging DC current to the battery.

DYNAMO STANDARD OUTPUT

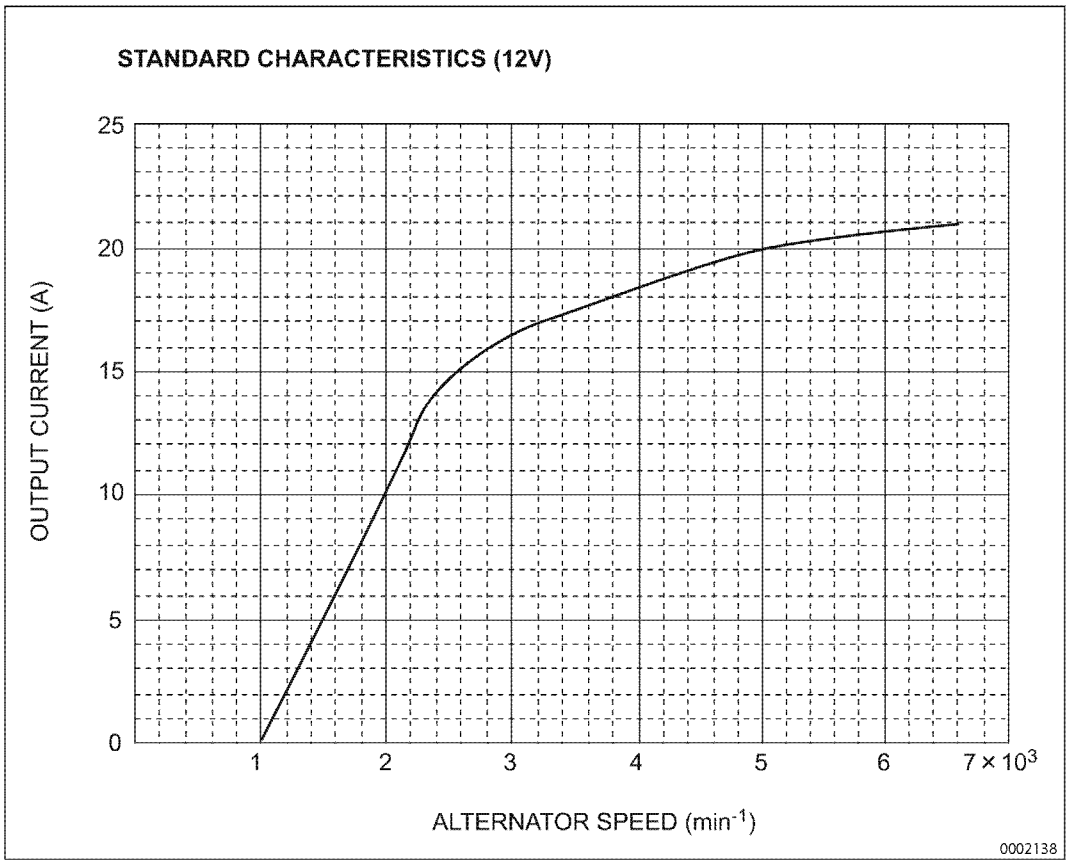

Figure 12-22

TESTING OF DYNAMO

Use a circuit tester or multimeter to perform the following tests.

Testing Stator Coil Continuity

1. Disconnect the dynamo output wire connector.
2. Connect one meter lead to each of the stator wire terminals and read the meter.

Results: The meter reading should indicate continuity. If continuity is not indicated, the windings are open and the stator must be replaced.

Testing Stator Coil Short-to-Ground

1. Disconnect the dynamo output wire connector.
2. Test continuity between each stator wire terminal and engine ground.

Results: The meter reading should infinity. If the meter reading indicates continuity, the windings are shorted to ground and the stator must be replaced.

Testing Dynamo Regulated Output

1. Test and record the battery voltage with the engine not running.
2. Start the engine and operate it at normal operating rpm.
3. Again, check the battery voltage with the engine running.

Results: The meter reading with the engine running must be higher than with the engine not running.

- If results are not correct, test the stator for continuity and shorts to the ground.
- Check the charging system wiring.
- If no problems are found in previous checks, replace the IC regulator.

DYNAMO

Removal of Dynamo

1. Disconnect the output wire connector from the dynamo.
2. Loosen the V-belt.

⚠ CAUTION

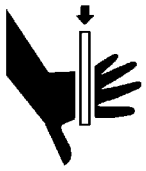

PINCH HAZARD!

Carefully rotate the alternator toward the cylinder block while loosening the V-belt. Failure to comply may result in minor or moderate injury.

0000014en

3. Remove the V-belt adjuster from the dynamo bolt **(Figure 12-23, (1))**.
4. Remove the nut **(Figure 12-23, (2))** from the gear case stud. Remove the dynamo.

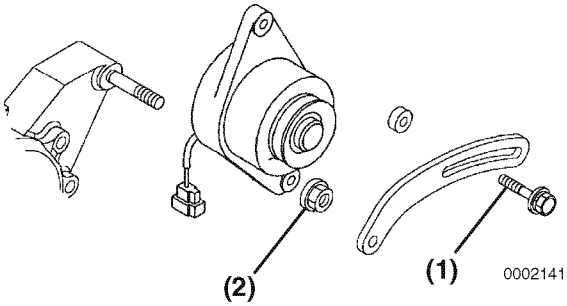

Figure 12-23

Disassembly of Dynamo

1. Remove the rear cover **(Figure 12-24, (1))**.
2. Remove the nut **(Figure 12-24, (2))**, lock washer **(Figure 12-24, (3))**, and flat washer **(Figure 12-24, (4))**.

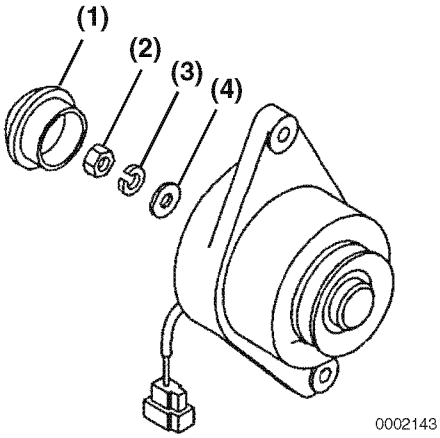

Figure 12-24

3. Remove the through bolt **(Figure 12-25, (1))**, pulley half **(Figure 12-25, (2))**, flywheel **(Figure 12-25, (3))**, flat washer **(Figure 12-25, (4))**, bearings **(Figure 12-25, (5))**, and spacer **(Figure 12-25, (6))**.

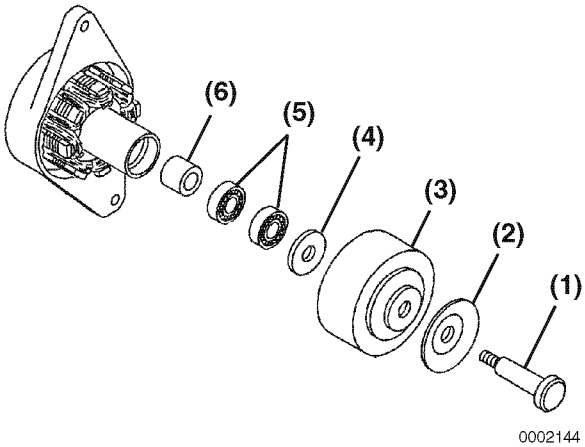

Figure 12-25

4. Remove the screws **(Figure 12-26, (1))** and the stator assembly **(Figure 12-26, (2))**.
5. Remove the rear bearing **(Figure 12-26, (3))**.

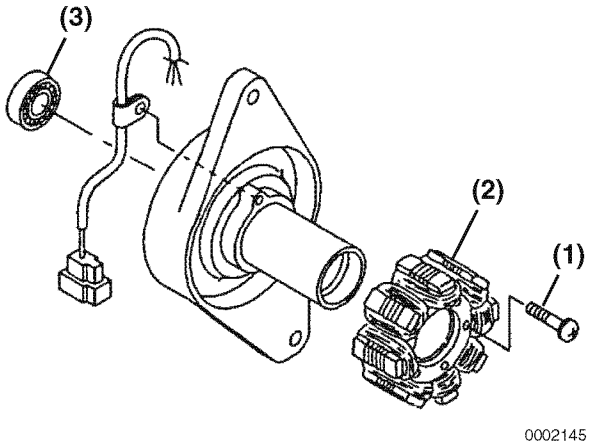

Figure 12-26

Reassembly of Dynamo

1. Reinstall the rear bearing **(Figure 12-27, (3))**.
2. Reinstall the stator **(Figure 12-27, (2))** and screws.

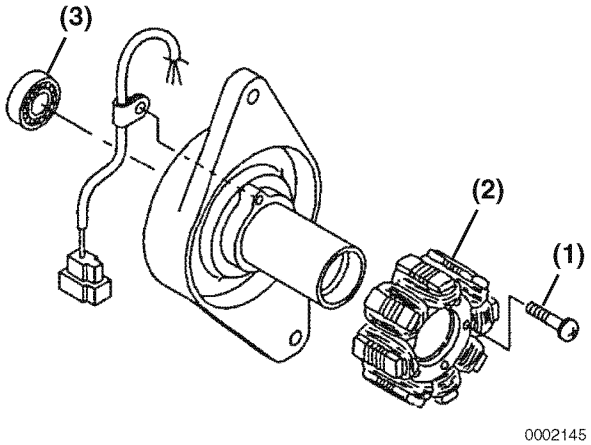

Figure 12-27

3. Reinstall the front bearings **(Figure 12-28,** (5)) and spacer **(Figure 12-28,** (6)).
4. Reinstall the flat washer **(Figure 12-28, (4))**, flywheel **(Figure 12-28, (3))**, pulley half **(Figure 12-28, (2)**, and through bolt **(Figure 12-28, (1))**.

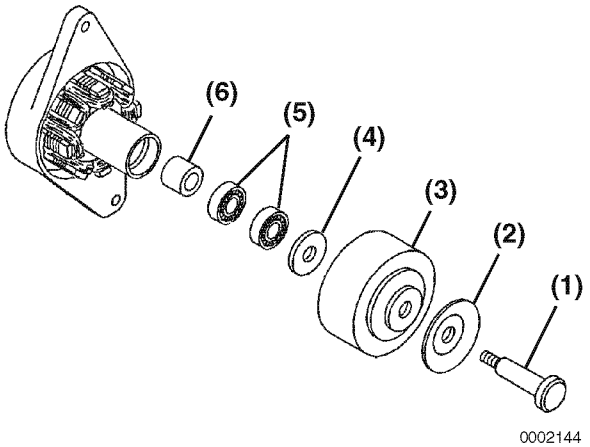

Figure 12-28

5. Reinstall the flat washer **(Figure 12-29, (4))**, lock washer **(Figure 12-29, (3))**, and nut **(Figure 12-29, (2))**. Tighten the nut to the specified torque.
6. Reinstall the rear cap **(Figure 12-29, (1))**.

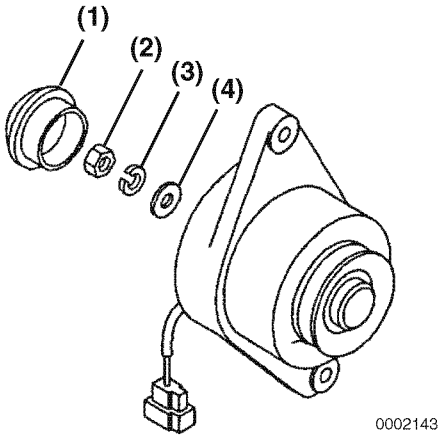

Figure 12-29

Installation of Dynamo

1. Position the dynamo on the gear case. Loosely reinstall the nut **(Figure 12-30, (2))** on the gear case stud and the V-belt adjuster bolt **(Figure 12-30, (1))**.

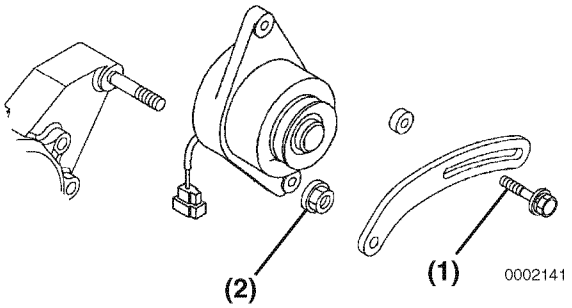

Figure 12-30

2. Reconnect the dynamo output wire connector.
3. Reinstall the V-belt. Tighten the V-belt to the proper tension as described in *Check and Adjust Cooling Fan V-Belt on page 5-22*.
4. Start the engine. Listen for any unusual sounds from the alternator.

CAUTION

Do not operate the engine if the alternator is producing unusual sounds. Damage to the alternator will result.

0000039en

5. Verify that the charge indicator is ON while the engine is operating. If the charge indicator is not ON, repair the problem before operating the engine.

Section 13

ELECTRONIC CONTROL SYSTEM

Page

Engines available with the electronic control system 13-2
Before You Begin Servicing 13-2
Introduction..... 13-4
ELECTRONIC CONTROL SYSTEM..... 13-4
Electronic control harness connections..... 13-5

This Page Intentionally Left Blank

ENGINES AVAILABLE WITH THE ELECTRONIC CONTROL SYSTEM

The electronic control system is available for four engine models: 4TNV84T-Z, 4TNV98-E, 4TNV98-Z, and 4TNV98T-Z.

BEFORE YOU BEGIN SERVICING

⚠ WARNING

- **Never use the E-ECU for other purposes than intended or in other ways than specified by Yanmar. Doing so could result in the violation of emission control regulations and will void the product warranty.**
- **Improper use or misuse of the E-ECU may result in death or serious injury due to an abrupt and unexpected increase in engine speed.**

9999999en

⚠ WARNING

- **Be sure to use the E-ECU in conjunction with the engines whose models or serial numbers are specified by Yanmar.**
  Other E-ECU/engine combinations than specified will void the engine warranty.
- **Improper use or misuse of the E-ECU may result in death or serious injury due to an abrupt and unexpected increase in engine speed.**

9999998en

⚠ WARNING

- **Replacing the fuel injection pump involves rewriting the fuel injection data in the E-ECU.**
  Be sure to contact your local Yanmar dealer before replacing the fuel injection pump.
  Failure to rewrite the fuel injection data before replacing the fuel injection pump will void the engine warranty.
- **Improper use or misuse of the E-ECU may result in death or serious injury due to an abrupt and unexpected increase in engine speed.**

9999997en

⚠ WARNING

- **Replacing the E-ECU involves migrating the fuel injection data to the existing E-ECU to the new unit.**
  Be sure to contact your local Yanmar dealer before replacing the E-ECU.
  Failure to migrate the fuel injection data before replacing the E-ECU will void the engine warranty.
- **Improper use or misuse of the E-ECU may result in death or serious injury due to an abrupt and unexpected increase in engine speed.**

9999996en

CAUTION

Shut down the engine if the fault indicator comes on.

Continuing running the engine with the fault indicator being on may result in a serious malfunction of or damage to the engine, and will void the engine warranty.

9999999en

CAUTION

Do not energize the starter for a period of longer than 15 seconds.

Take a pause of at least 30 seconds between energization of the starter.

Otherwise the starter could suffer damage.

9999998en

CAUTION

- High-pressure washing not recommended.
- Avoid using high-pressure washing for electronic or electric devices installed in, on or around the engine, including the E-ECU, relays and harness couplers.

Otherwise such devices may suffer malfunction due to water ingress into them.

9999997en

CAUTION

- Do not plug or unplug the E-ECU for a period of at least 6 seconds after power to the unit has been turned on or off.
- Do not touch connector pins of the E-ECU with bare hands.
  Doing so may result in corrosion of the connector pins and/or damage to the internal circuits of the E-ECU due to static electricity.
- Do not force a measuring probe into the female coupler.
  Doing so may cause contact failure of the connector pins, resulting in malfunction of the E-ECU.
- Take care to prevent water from entering the couplers when plugging or unplugging the connector.
  Water inside the couplers may cause corrosion, resulting in malfunction of the E-ECU.
- Avoid plugging/unplugging the connector more than approx. 10 times.
  Frequent plugging/unplugging of the connector may cause contact failure of the connector pins, resulting in malfunction of the E-ECU.
- Do not use the E-ECU that has ever suffered drop impact.

9999996en

CAUTION

Always check the battery for proper charge.

Otherwise the electronically controlled engines may fail to start.

9999995en

INTRODUCTION

None of the components of the electronic control system can be individually repaired. When any component is faulty and needs repair, the entire assembly must be replaced.

ELECTRONIC CONTROL SYSTEM

Model 4TNV84T-Z, 4TNV98-E, 4TNV98-Z and 4TNV98T-Z engines come with the Exhaust Gas Recirculation (EGR) system to conform to the next engine emission regulations (EPA 2008 rules). The EGR system and an electronic governor (Eco-governor) constitute an electronic engine control system.

The electronic engine control system regulates the exhaust gas recirculation flow rate and the fuel injection volume depending on the engine load and speed signals from the engine controller (E-ECU), so that the exhaust gas is kept clean according to the emission control regulations. **Figure 13-1** illustrates the electronic engine control system.

Features of the electronic engine control system include:

- Engine speed control schemes
  Droop control / Low-idling speed up / Auto deceleration / High-idling speed down / Black smoke suppression
- Starting aid
  Auto preheating / After heating
- Engine failure detection
- CAN communication with the control system of the driven machine

Although these features are described in section 4-7, whether they are available as options differs among machines/vehicles; for more information, see the instruction manuals for the respective machines/vehicles.

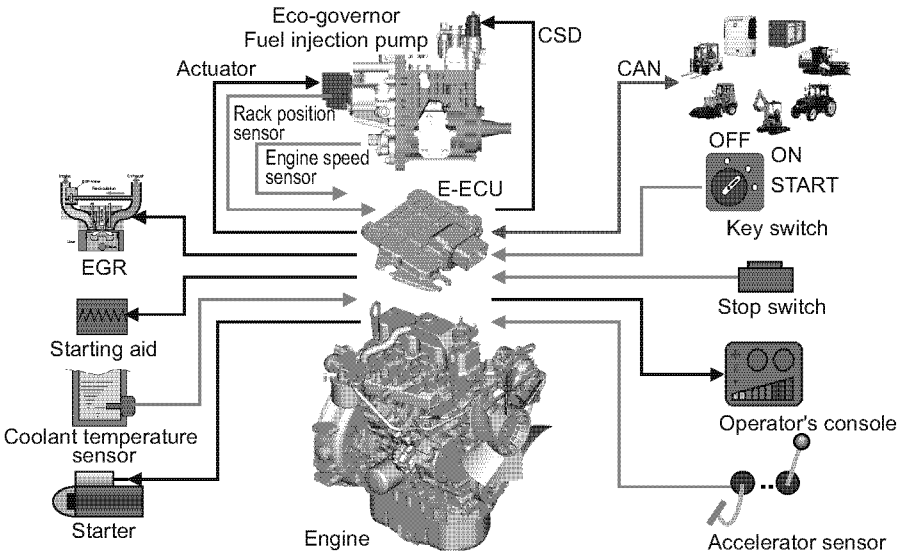

Figure 13-1

ELECTRONIC CONTROL HARNESS CONNECTIONS

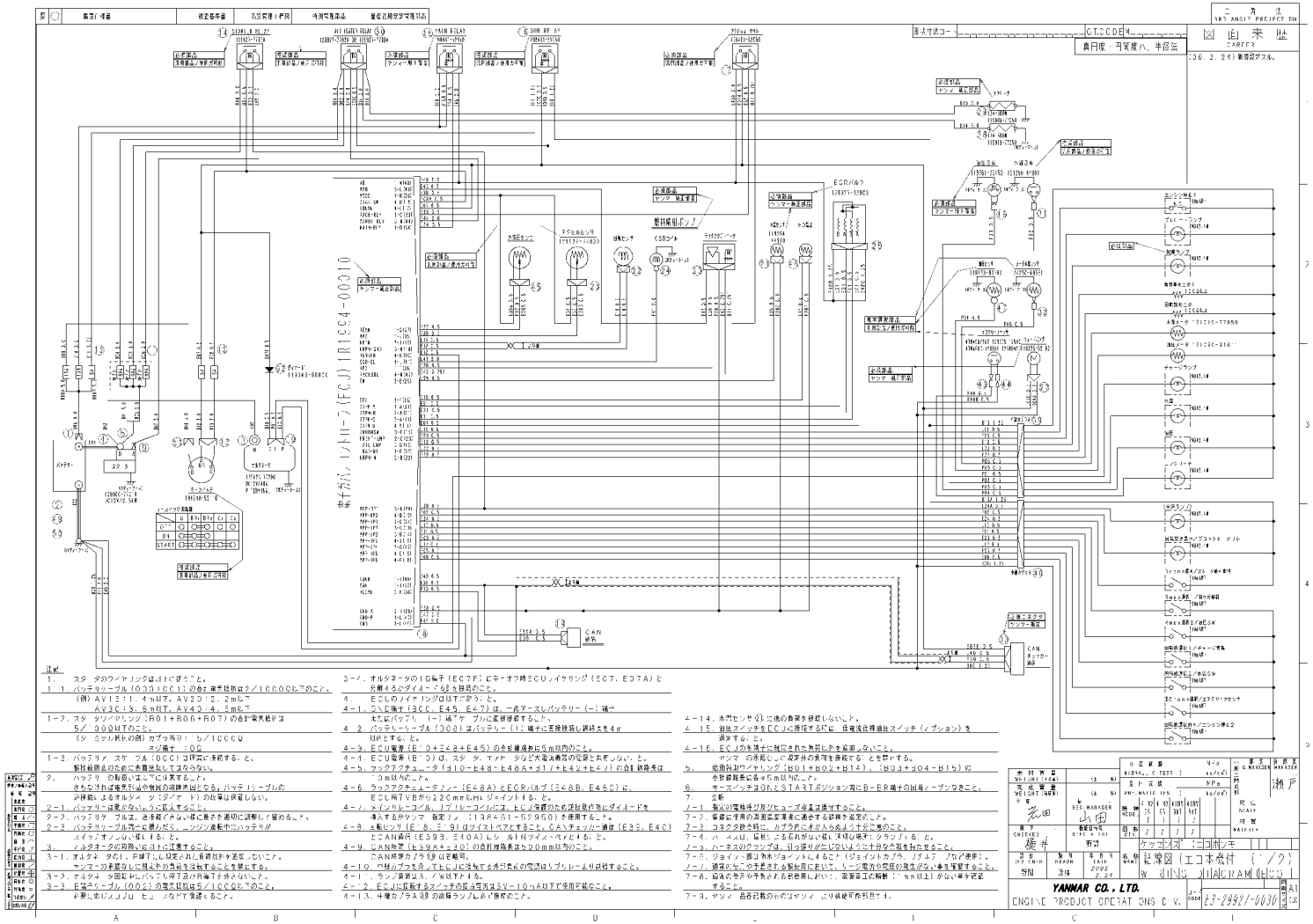

注記

1. スタータのワイヤリングは太に従うこと。
1-1. バッテリーケーブル(0031CC1)の自己発熱抵抗タ/1CC00以下のこと。
(例) AV1E:1.4mΩ以下, AV20:2.2mΩ以下
AV3C:3.5mΩ以下, AV40:4.5mΩ以下
1-2. スタータリレーリング(R01+R06+R07)の合計電気抵抗は5/ 00Ω以下のこと。
(タ ミラル料化の例) カプラ当り: 5/1CC00
ヌジ端子 :0Ω
1-3. バッテリ スケ ブル(0CC)は厚実に接続すること。
配線被覆のために直接接触してはならない。
2. バッテリ の取付はシ ニに固定すること。
きちんとされれば電気的な接続が抵抗になる。バッテリケーブルの
ボ接続 によるオルタメ タ(ダイナ ト)の故障は保証しない。
2-1. バッテリは変がないように配置すること。
2-2. バッテリケ ブルは、走行振ぐらない程に長さを適切に調整して留めること。
2-3. バッテリケーブル周辺に積んだり、ニッシン運転中にバッテリが
メイッチンゴ ないれ ること。
3. ルタネータの取扱いに注意すること。
3-1. オルタネ タのL、P端子に印加された電圧はチャ ジ用ダ ャ ジ用。
ヤンマーの承認なしに他ものの負荷を接続することを禁止する。
3-2. オルタネ タ回転中にバッテリ端子 の負荷ケ ブルを外さないこと。
3-3. 配線ケーブル(0CC)の電気抵抗は5/1CC00以下のこと。
必要に応じ ノ ノ ル ヒ ュ ズなどで保護すること。
3-4. オルタネータのIG端子(EC7F)はキーオフ時ECUシャイヤリング(EC7, E07A)と
分離するようダイオード(D2)を接続のこと。
4. ECUのノイヤリングは太で行う。と。
4-1. ECU端子(3CC, E45, E47)は、一点アースしバッテリー(−)端子
または バッテリ (−)端子ケ ブルに直接接続すること。
4-2. バッテリ ケーブル(3CC)はバッテリ(−)端子に直接接続し線路太を4m
以内とすること。
4-3. ECU電源(B+3+E28+E45)の合計線抵抗は5mΩ以内のこと。
4-4. ECU電源(B−3)は、スタ タ、マ ア ト タなど大電流機器の電源と共ボ しない。と。
4-5. ラックアクチュエータ(J10−E48−E48A+J11/+E42+E47)の合計 線路抵抗は
3mΩ以内のこと。
4-6. ラックアクチュエータノ ー(E48A)とEGRバルブ(E48B, E46C)は、
ECU用TVBから22cm以内にジョイントすること。
4-7. ノイ ンリレーコ ル、ノ ブ リレーコ ルには、ECU保護のため逆起電圧吸収ダイオードを
挿入する かヤンマ 指定ノ (129A51-65950)を使用すること。
4-8. 配ヒッリ(E−3, E−9)はツイストペアとすること。CANチェッカー通信(E39, E40)
とCAN端子(E39, E10A)とノ AHNツイ ペ ペアとすること。
4-9. CAN抵抗(E59A+E20)の合計抵抗値は50mΩ以内のこと。
CAN終端カプラ09は不要。
4-10. 中継カプラ内でECUに接続する外部機器の電源はリ ブ リーより供給すること。
4-11. ラップ 調整は、ノ ノ以下とする。
4-12. ECUに接続するスイッチの抵抗電圧は3V−10ωAH下で使用可能なこと。
4-13. 中継カプラA09の接続ラップ しおく接続のこと。
4-14. 水用センサ(3)に他の負荷を接続しないこと。
4-15. 自社スイッチ(ECU)に接続する際に、信頼度圧縮過社スイッチ(ノ プション)を
使用すること。
4-16. ECUの各端子に対応された負荷以外を接続しないこと。
ヤンマ の承認しに対応外の負荷を接続すること を禁止する。
5. 始動制御ワイヤリング(B01+B02+B12)、(B03+B04−B15)の
合計抵抗値は各々5mΩ以内のこと。
6. キースイッチ3のC START ポジション端子にB−ER端子の出場ノ ブ ンなきこと。
7. 全般
/−1. 配線の電機手段やヒューズ容量は適切すること。
7−2. 電線に使用の耐熱温度車両に適合する絶縁を選定のこと。
7−3. コネクタ部を特に、カプラ内ロッカ入 ゆ ゆ ゆ 十分ご考のこと。
7−4. ハ ネスは、曲げ、ねじれ、ねじれがないように、不規は場所にクランプ する。と。
/−5. ハーネスのクランプは、ゆ ゆ ゆ がこじのないように十分な余裕を持たせること。
7−6. ジョイン部は熱ボジョントに4こと(ジョイントカプラ、ノ ブ ル プ ロ ク使用)。
/−7. 過度の生ニ や予見される振動周波において、ノ ー 電流や電圧の発生がない事を確認すること。
7−8. 過度の発熱や予見される部位周辺において、最低耐工の絶縁(2 ms以上)がない場合は設
すること。
7−9. ヤンマ 品各部品の中のはヤンマ ニ以外は使用不可部品です。

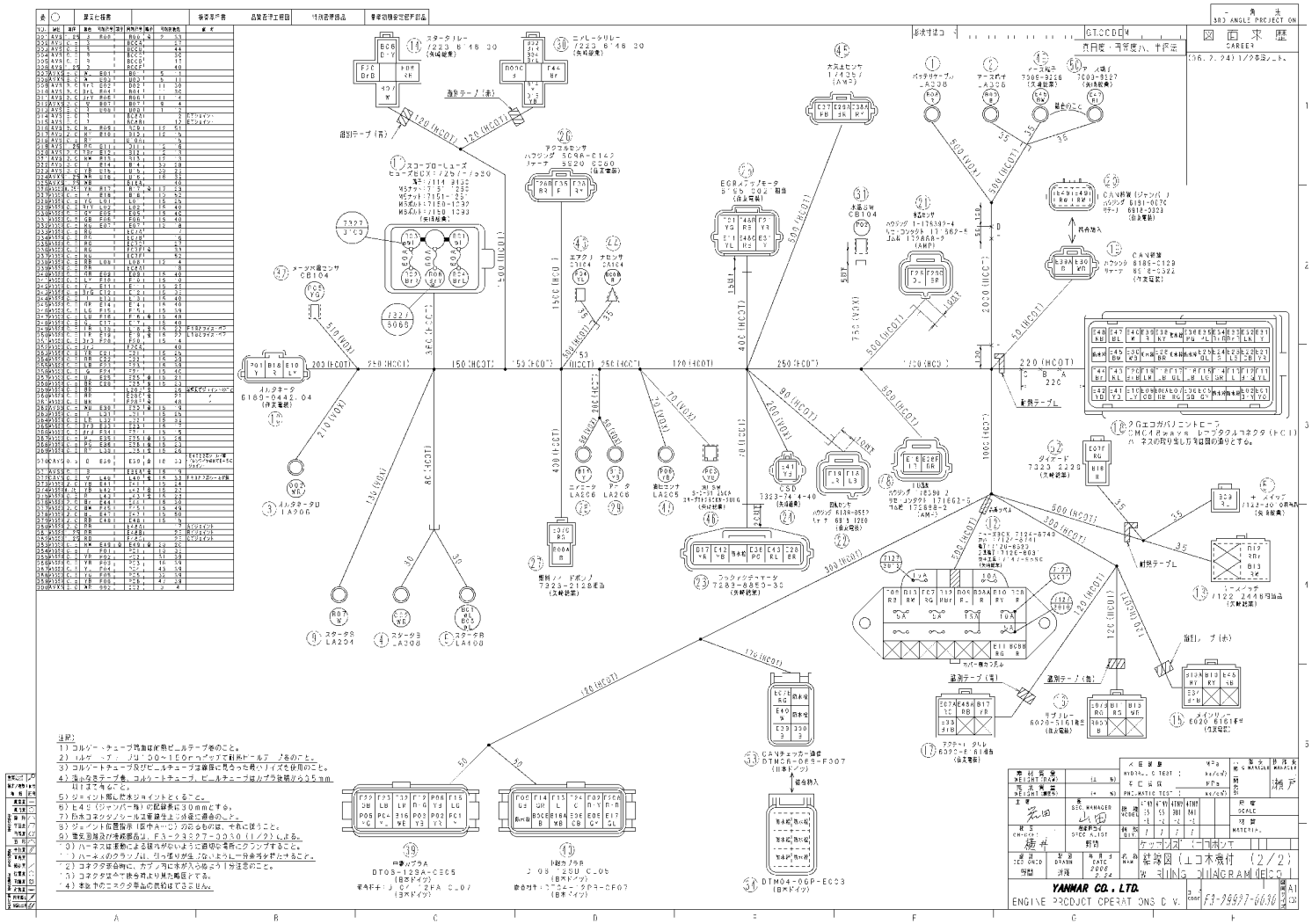
図面求歴
YANMAR CO., LTD.
ENGINE PRODUCT OPERATIONS D.V.

This Page Intentionally Left Blank

Section 14

ELECTRIC WIRING

Page

Electric Wiring Precautions 14-3
Electrical Wire Resistance 14-4
Battery Cable Resistance..... 14-5
Electrical Wire Sizes - Voltage Drop 14-6
Conversion of AWG to European Standards..... 14-7

This Page Intentionally Left Blank

ELECTRIC WIRING PRECAUTIONS

Failure to follow these precautions may result in the failure of an electrical component and the loss of warranty coverage on that item as well as related items. Make sure that all users read and understand these precautions.

CAUTION

Do not reverse the positive (+) and negative (-) ends of the battery cable. The alternator diode and stator coil will be damaged.

0000050en

CAUTION

When the battery indicator goes out, it should not come on again. The battery indicator only comes on during operation if the alternator fails. However, if an LED is used in the battery indicator, the LED will shine faintly during normal operation.

0000051en

CAUTION

Make sure that the combined total resistance of the battery cable in both directions between the starter motor and the battery is within the value indicated in the *Battery Cable Resistance chart* in the *Electric Wiring Section* of this manual. The starter motor will malfunction and fail if the resistance is higher than the specified value.

0000057en

CAUTION

Removing the battery cables or the battery while the engine is operating may cause damage to the current limiter depending on the electrical equipment being used. This situation could cause loss of control of output voltage. The continuous high voltage of 23-24 volts (for 5000 rpm dynamo) will damage the current limiter and other electrical equipment.

0000058en

CAUTION

Reversing the battery cable connections at the battery or on the engine will destroy the SCR diode in the current limiter. This will cause the charging system to malfunction and may cause damage to the electrical harnesses.

0000059en

ELECTRICAL WIRE RESISTANCE

AWG	Metric Nominal mm²	Ohms / Foot Resistance
20	0.5	0.009967
18	0.8	0.006340
16	1.25	0.004359
14	2	0.002685
12	3	0.001704
10	5	0.001073
8	8	0.000707
6	15	0.000421
4	20	0.000270
2	30	0.000158
1	40	0.000130
0 (1/0)	50	0.000103
00 (2/0)	60	0.000087
000 (3/0)	85	0.000066
0000 (4/0)	100	0.000051

Wiring voltage drop should not exceed 5% [0.05] x 12 Volts = 0.6 Volts.

Voltage Drop = Current [Amps] x Length of Wire [Feet] x Resistance per Foot Ω

Example:

Current draw of 100 Amps x 3 feet of 4 AWG wire

100 Amps x 3 Feet x 0.000270 = 0.08 Volts [Voltage Drop]

BATTERY CABLE RESISTANCE

AWG	mm²	Maximum Total Battery Cable Length (Positive Cable + Negative Cable + a*) 12V Starter Motor Output			
		Less Than 2.68 HP (2 kW)		Greater Than 2.68 HP (2 kW)	
		m	ft	m	ft
6	15	1.5	4.75	N/A	N/A
4	20	2.3	7.4	N/A	N/A
2	30	3.8	12.6	2.3	7.5
1	40	4.6	15.3	2.8	9.2
0 (1/0)	50	5.9	19.5	3.5	11.6
00 (2/0)	60	7.0	22.8	4.2	13.7
000(3/0)	85	9.3	30.5	5.6	18.3
0000 (4/0)	100	11.9	39.0	7.1	23.4
00000 (5/0)	125	N/A	N/A	8.3	27.3
000000 (6/0)	150	N/A	N/A	10.1	33.3

Note: Total allowable resistance of the complete battery cable circuit (positive cable + negative cable + a*) (a*: Resistance (Ω) of a battery switch or other electrical equipment having high resistance).

Note: For starter motors of less than 2.68 HP (2 kW): the total resistance must be less than 0.002 Ω. For starter motors of greater than 2.68 HP (2 kW): the total resistance must be less than 0.0012 Ω.

ELECTRICAL WIRE SIZES - VOLTAGE DROP

Total current on circuit in amps	Length of conductor from source of current to device and back to source (in feet)																		
	10	15	20	25	30	40	50	60	70	80	90	100	110	120	130	140	150	160	170
12 Volts	Wire Size (AWG)																		
5	18	16	14	12	12	10	10	10	8	8	8	6	6	6	6	6	6	6	6
10	14	12	10	10	10	8	6	6	6	6	4	4	4	4	2	2	2	2	2
15	12	10	10	8	8	6	6	6	4	4	2	2	2	2	2	1	1	1	1
20	10	10	8	6	6	6	4	4	2	2	2	2	1	1	1	0	0	0	2/0
25	10	8	6	6	6	4	4	2	2	2	1	1	0	0	0	2/0	2/0	2/0	3/0
30	10	8	6	6	4	4	2	2	1	1	0	0	0	2/0	2/0	3/0	3/0	3/0	3/0
40	8	6	6	4	4	2	2	1	0	0	2/0	2/0	3/0	3/0	3/0	4/0	4/0	4/0	4/0
50	6	6	4	4	2	2	1	0	2/0	2/0	3/0	3/0	4/0	4/0	4/0				
60	6	4	4	2	2	1	0	2/0	3/0	3/0	4/0	4/0	4/0						
70	6	4	2	2	1	0	2/0	3/0	3/0	4/0	4/0								
80	6	4	2	2	1	0	3/0	3/0	4/0	4/0									
90	4	2	2	1	0	2/0	3/0	4/0	4/0										
100	4	2	2	1	0	2/0	3/0	4/0											
24 Volts																			
5	18	18	18	16	16	14	12	12	12	10	10	10	10	10	8	8	8	8	8
10	18	16	14	12	12	10	10	10	8	8	8	6	6	6	6	6	6	6	6
15	16	14	12	12	10	10	8	8	6	6	6	6	6	4	4	4	4	4	2
20	14	12	10	10	10	8	6	6	6	6	4	4	4	4	2	2	2	2	2
25	12	12	10	10	8	6	6	6	4	4	4	4	2	2	2	2	2	2	1
30	12	10	10	8	8	6	6	4	4	4	2	2	2	2	2	1	1	1	1
40	10	10	8	6	6	6	4	4	2	2	2	2	1	1	1	0	0	0	2/0
50	10	8	6	6	6	4	4	2	2	2	1	1	0	0	0	2/0	2/0	2/0	3/0
60	10	8	6	6	4	4	2	2	1	1	0	0	0	2/0	2/0	3/0	3/0	3/0	3/0
70	8	6	6	4	4	2	2	1	1	0	0	2/0	2/0	3/0	3/0	3/0	3/0	4/0	4/0
80	8	6	6	4	4	2	2	1	0	0	2/0	2/0	3/0	3/0	3/0	4/0	4/0	4/0	4/0
90	8	6	4	4	2	2	1	0	0	2/0	2/0	3/0	3/0	4/0	4/0	4/0	4/0	4/0	
100	6	6	4	4	2	2	1	0	2/0	2/0	3/0	3/0	4/0	4/0	4/0				

CONVERSION OF AWG TO EUROPEAN STANDARDS

Conductor Size (AWG)	Conductor Diameter (mm)	Conductor Cross-sectional Area (mm^2)
25	0.455	0.163
24	0.511	0.205
23	0.573	0.259
22	0.644	0.325
21	0.723	0.412
20	0.812	0.519
19	0.992	0.653
18	1.024	0.823
17	1.15	1.04
16	1.29	1.31
15	1.45	1.65
14	1.63	2.08
13	1.83	2.63
12	2.05	3.31
11	2.30	4.15
10	2.59	5.27
9	2.91	6.62
8	3.26	8.35
7	3.67	10.6
6	4.11	13.3
5	4.62	16.8
4	5.19	21.2
3	5.83	26.7
2	6.54	33.6
1	7.35	42.4
0 (1/0)	8.25	53.4
00 (2/0)	9.27	67.5
000(3/0)	10.40	85.0
0000 (4/0)	11.68	107.2
00000 (5/0)	13.12	135.1
000000 (6/0)	14.73	170.3
1.1 circular mil (CM) @ 0.0005067 mm^2		

This Page Intentionally Left Blank

Section 15

FAILURE DIAGNOSIS

Page

Special Service Tools 15-3
Troubleshooting By Measuring Compression Pressure 15-4
Compression Pressure Measurement Method 15-4
Quick Reference Table For Troubleshooting 15-7

This Page Intentionally Left Blank

SPECIAL SERVICE TOOLS

Compression Gauge Kit	For measuring compression pressure Yanmar Gauge Set Part No. TOL-97190080	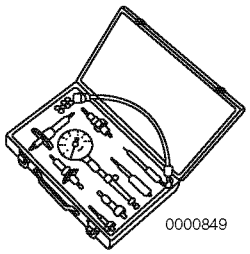
	Adapter for direct injection 2-valve cylinder head Yanmar Adapter Part No. 119802-92950	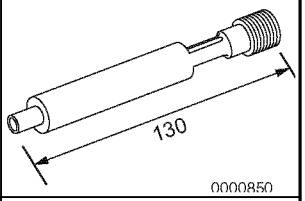
	Adapter for direct injection 4-valve cylinder head for 4TNV94L/98/98T Yanmar Adapter Part No. 129906-92950	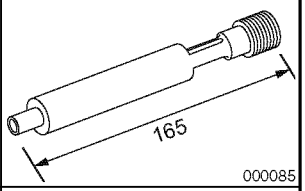
	Adapter for direct injection 4-valve cylinder head for 4TNV106(T) Yanmar Adapter Part No. 123907-92950	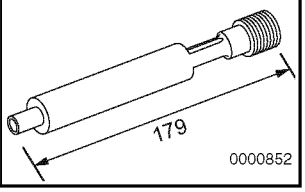

TROUBLESHOOTING BY MEASURING COMPRESSION PRESSURE

Compression pressure drop is one of the major causes of increasing blow-by gas (engine oil contamination or increased engine oil consumption as a resultant phenomenon) or starting failure. The compression pressure is affected by the following factors:

1. Degree of clearance between the piston and cylinder
2. Degree of clearance at the intake / exhaust valve seat
3. Gas leak from the nozzle gasket or cylinder head gasket

The pressure will drop due to increased parts wear. Pressure drop reduces the durability of the engine.

A pressure drop may also be caused by a scratched cylinder or piston, dust entrance from the dirty air cleaner element or a worn or broken piston ring. Measure the compression pressure to determine the condition of the engine.

Compression Pressure Measurement Method

1. Warm up the engine.
2. Stop the engine. Remove the high-pressure fuel injection lines as an assembly from the engine.

For engines with 2 valve cylinder heads

3. Remove the fuel injector from the cylinder to be measured. *See Removal of Fuel Injectors on page 7-35.*

CAUTION

Remove or install the high-pressure fuel injection lines as an assembly whenever possible. Disassembling the high-pressure fuel injection lines from the retainers or bending any of the fuel lines will make it difficult to reinstall the fuel lines.

0000047en

For engines with 4 valve cylinder heads

4. Remove the valve cover assembly. *See Removal of Valve Cover on page 6-52.* Remove the fuel injector from the cylinder to be tested. *See Removal of Fuel Injectors on page 7-35.*
5. Turn off the fuel supply valve in the fuel supply line. Disconnect the fuel injection pump stop solenoid at the connector. This prevents the fuel injection pump from injecting fuel during compression testing.
6. Before installing the compression gauge **((Figure 15-1, (1))** 2 valve engine, **(Figure 15-2, (1))** 4 valve engine) adapter, crank the engine with the stop solenoid disconnected for a few seconds to clear the cylinder of any residual fuel.
7. Install a nozzle seat at the tip end of the compression gauge adapter. Install the compression gauge and the compression gauge adapter at the cylinder to be measured.
8. Crank the engine until the compression gauge reading is stabilized.

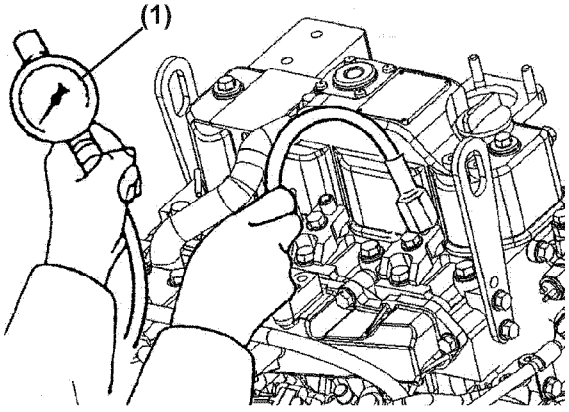

Figure 15-1

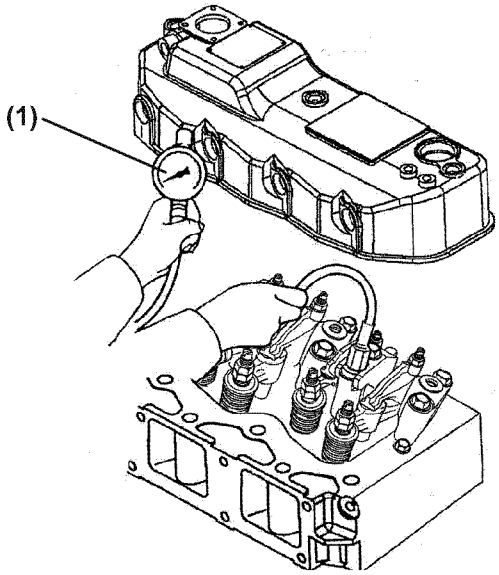

Figure 15-2

9. After performing the compression check remove the compression gauge and compression gauge adapter from the cylinder.

For engines with 2 valve cylinder heads

10. Reinstall the fuel injector, high-pressure fuel injection lines, and reconnect the stop solenoid. *See Reassembly of Fuel Injectors on page 7-41.*

For engines with 4 valve cylinder heads

11. Install the fuel valves. *See Installation of the Fuel Injectors on page 7-42. See Inspection of Valve Guides on page 6-57.* Then install the valve covers and injection high pressure lines. . Then connect the stop solenoid..
12. Turn on the fuel supply valve and reconnect the injection pump stop solenoid.
13. Prime the fuel system. Check for leaks. Test the engine.

Standard Compression Pressure (Reference Value)

Engine Model	Compression Pressure at 250 rpm (250 min-1)		Deviation Between Cylinders
	Standard	Limit	
3TNV82A	443 - 473 psi (3.06 - 3.26 MPa; 30 - 32 kgf/cm²)	340 - 370 psi (2.35 - 2.55 MPa; 24 - 26 kgf/cm²)	29 - 43 psi (0.2 - 0.3 MPa; 2 - 3 kgf/cm²)
3TNV84 4TNV84	455 - 485 psi (3.14 - 3.34 MPa; 32 - 34 kgf/cm²)	355 - 385 psi (2.45 - 2.65 MPa; 25 - 27 kgf/cm²)	
3TNV84T 4TNV84T	411 - 441 psi (2.84 3.04 MPa; 29 - 31 kgf/cm²)	340 - 370 psi (2.35 - 2.55 MPa; 24 - 26 kgf/cm²)	
3TNV88 4TNV88 4TNV94L 4TNV98 4TNV98T 4TNV106 4TNV106T	483 - 513 psi (3.33 - 3.53 MPa; 34 - 36 kgf/cm²)	384 - 414 psi (2.65 - 2.85 MPa; 27 - 29 kgf/cm²)	

Engine Speed and Compression Pressure (Use for Reference)

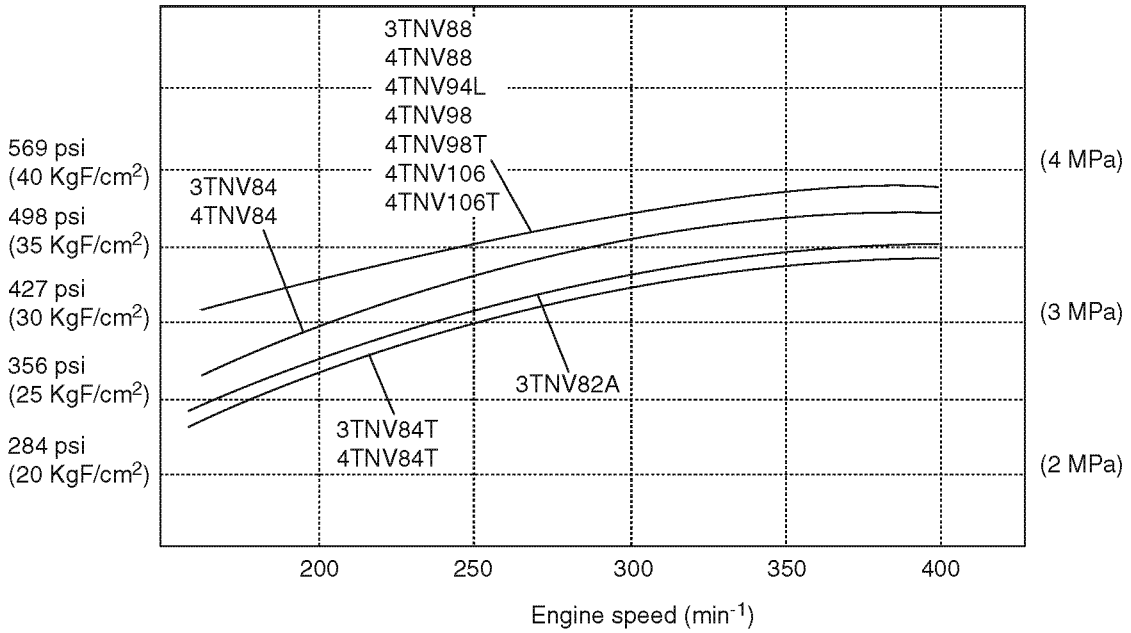

Figure 15-3

Measured Value and Troubleshooting

When the measured compression pressure is below the limit value, inspect each part by referring to the table below.

No.	Item	Cause	Corrective Action
1	Air Cleaner Element	Clogged element	Clean the element.
		Broken element	Replace the element.
		Defect at element seal portion	
2	Valve Clearance	Excessive or no clearance	Adjust the valve clearance.
3	Valve Timing	Incorrect valve clearance	Adjust the valve clearance.
4	Cylinder Head Gasket	Gas leak from gasket	Replace the gasket.
			Retighten the cylinder head bolts to the specified torque.
5	Intake / Exhaust Valve	Sticking valve	Replace the intake / exhaust valve.
	Valve Seat	Gas leak due to worn valve seat or foreign matter trapped in valve	Lap the valve seat.
6	Piston	Gas leak due to scratching or wear	Perform honing and use an oversized part.
	Piston Ring		
	Cylinder		

QUICK REFERENCE TABLE FOR TROUBLESHOOTING

The following table summarizes the general trouble symptoms and their causes. If any trouble symptom occurs, take corrective action before it becomes a serious problem so as not to shorten the engine service life.

This Page Intentionally Left Blank

Failure Diagnostic List

Symptoms and conditions of failures / Cause	Defective start					Engine stall after start			Defective rotation control						Insufficient engine output			Noise/vibration				Lubricant				Cooling water		Intake		Exhaust				Fuel			Electrics/electronics					Action	Referenced page number
	Starter not rotate		Starter rotates			Exhaust fume				Without load				At work	Exhaust color															At work													
	ECU indicator lamp not on just after key-on	ECU indicator lamp on just after key-on (2 seconds)	Engine not start (not even initial combustion)	Engine not start (stall after serial combustion)	Engine starts later then ever	None	Little	Much	Speed change by accelerator not available (constant speed)	Specified speed setting not available	Poor acceleration	Return to low speed not smooth	Hunting	Hunting	Normal	White	Black	Knocking noise at combustion too high	Combustion noise uneven	Noise other than combustion from engine	Engine vibration too big	Lubricant consumption too much	Lubricant diluted with fuel	Lubricant mixed with water	Oil pressure too low (oil pressure lamp on)	Overheated (water temperature lamp on)	Water temperature too low	Pressure down (air cleaner lamp on)	Pressure up	White exhaust color	Black exhaust color	Blow-by too much	Exhaust temperature up	Fuel consumption too much	Fuel mixed with water (oil-water separator lamp on)	Fuel filter contaminated too early	Battery charge defect (charge lamp on)	ECU indicator lamp flashing	ECU indicator lamp not on just after key-on (2 seconds)	Prescribed ECU control function not operate	Fuse meltdown, disconnection (repeated)		
Engine system: Intake/exhaust valve clearance incorrect			○			○									○					○								○					○									Valve clearance adjustment	See *"Measuring and Adjusting Valve Clearance" (on page 6-66)*
Compression failure at valve seat			○												○		○			○								○			○	○	○	○									Valve seat facing	See *"Valve Face and Valve Seat" (on page 6-43)* for 2-valve head, and *"Valve Face and Valve Seat" (on page 6-59)* for 4-valve head.
Intake/exhaust valve seizure			○					○						○	○		○			○	○		○					○			○	○											Correction or replacement of intake/exhaust valve	See "Removal of Intake / Exhaust Valves" (on page 6-39).
Cylinder head gasket blow-out															○									○		○																	Gasket replacement	See "Removal of Cylinder Head" (on page 6-54).
Piston ring sticking or breakage			○					○					○			○				○	○	○	○			○				○		○	○									Piston ring replacement	See "Reassembly of Pistons" (on page 6-89).
Wear of piston ring, piston or cylinder			○					○								○						○	○							○		○										Horning work and usage of over-sized parts	See "Honing and Boring" (on page 6-88).
Seizure of crank pin metal or bearing parts			○			○							○	○						○	○											○										Repair or replacement	See "Inspection of Crankshaft" (on page 6-86).
Closed gap position fault of piston ring						○										○						○										○										Correction of closed gap position	See "Reassembly of Pistons" (on page 6-89).
Reverse assembling of piston ring																○						○								○		○										Correction of assembling	See "Reassembly of Pistons" (on page 6-89).
Wear of crank pin metal and journal metal													○	○	○					○	○				○																		Measurement and replacement	See "Inspection of Crankshaft" (on page 6-86).
Connecting rod bolt loose																				○	○				○																		Tightening at specified torque	See"Torque for Bolts and Nuts" (on page 6-25).
Foreign material entered into combustion chamber			○																	○		○										○										Disassembling and repair	See "Disassembly of Engine" (on page 6-72).
Gear backlash too big																				○																						Gear mesh adjustment	See "Checking Timing Gear Backlash" (on page 6-73).
Wear of intake/exhaust valve guide																○						○										○										Measurement and replacement	See "Inspection of Valve Guides" (on page 6-41).
Governor misalignment			○			○						○	○	○							○																					Adjustment	See "Check and Adjust the Governor Lever and Engine Speed Control (This does not apply to the following electronically controlled engines: 4TNV84T-Z, 4TNV98-E, Z, and 4TNV98T-Z.)" (on page 5-30).
Open/close timing failure of intake/exhaust valve			○													○	○			○										○	○											Valve clearance adjustment	See *"Measuring and Adjusting Valve Clearance" (on page 6-66).*
Engine vibration isolating support loose, damage													○	○						○	○																					Repair or replacement of faulty parts	

Symptoms and conditions of failures		Defective start					Engine stall after start			Defective rotation control							Insufficient engine output			Noise/vibration				Lubricant				Cooling water		Intake		Exhaust				Fuel			Electrics/electronics					Action	Referenced page number
		Starter not rotate		Starter rotates			Exhaust fume				Without load					At work	Exhaust color															At work													
Cause		ECU indicator lamp not on just after key-on	ECU indicator lamp on just after key-on (2 seconds)	Engine not start (not even initial combustion)	Engine not start (stall after serial combustion)	Engine starts later then ever	None	Little	Much	Speed change by accelerator not available (constant speed)	Specified speed setting not available	Poor acceleration	Return to low speed not smooth	Hunting	Hunting		Normal	White	Black	Knocking noise at combustion too high	Combustion noise uneven	Noise other than combustion from engine	Engine vibration too big	Lubricant consumption too much	Lubricant diluted with fuel	Lubricant mixed with water	Oil pressure too low (oil pressure lamp on)	Overheated (water temperature lamp on)	Water temperature too low	Pressure down (air cleaner lamp on)	Pressure up	White exhaust color	Black exhaust color	Blow-by too much	Exhaust temperature up	Fuel consumption too much	Fuel mixed with water (oil-water separator lamp on)	Fuel filter contaminated too early	Battery charge defect (charge lamp on)	ECU indicator lamp flashing	ECU indicator lamp not on just after key-on (2 seconds)	Prescribed ECU control function not operate	Fuse meltdown, disconnection (repeated)		
Supercharger	Floor contamination																		○														○		○										Floor cleaning	See *"Washing Procedure" (on page 10-12).*
Supercharger	Operation defect of waste gate																		○														○		○										Disassembling and inspection	See *"Waste Gate Valve Test" (on page 10-14).*
Supercharger	Wear of radial metal																	○						○								○													Disassembling and inspection	See *"Radial Bearing" (on page 10-11).*
Cooling water system	Radiator super cooled																												○			○				○									Thermostat replacement	See *"Disassembly of Engine Coolant Pump" (on page 8-10).*
Cooling water system	Insufficient radiator cooling																		○									○							○										Thermostat replacement or check for fan belt loose	See *"Disassembly of Engine Coolant Pump" (on page 8-10)* or *"Check and Adjust Cooling Fan V-Belt" (on page 5-22).*
Cooling water system	Insufficient cooling water quantity																		○									○							○										Water leak inspection of cooling water system	See *"Engine Coolant System Check" (on page 8-8).*
Cooling water system	Water jacket cracks																									○	○	○																	Repair or replacement	See *"Disassembly of Engine Coolant Pump" (on page 8-10).*
Cooling water system	Fan belt elongation																		○									○							○										Adjustment of belt tension	See *"Check and Adjust Cooling Fan V-Belt" (on page 5-22).*
Cooling water system	Thermostat fault																		○									○	○			○													Inspection or replacement	See *"Disassembly of Engine Coolant Pump" (on page 8-10).*
Lubricant system	Incorrect lubricant			○			○										○							○			○							○											Usage of correct lubricant	See *"Engine Oil Specifications" (on page 4-15).*
Lubricant system	Lubricant system leakage																							○			○																		Repair	See *"Disassembly of Oil Pump" (on page 9-10).*
Lubricant system	Insufficient discharge rate of trochoid pump																										○																		Inspection and repair	See *"Disassembly of Oil Pump" (on page 9-10).*
Lubricant system	Lubricant filter clogged																										○							○											Cleaning or replacement	See *"Replace Engine Oil and Engine Oil Filter" (on page 5-20).*
Lubricant system	Regulator valve fault																										○																		Cleaning, adjustment or replacement	See *"Disassembly of Oil Pump" (on page 9-10).*
Lubricant system	Insufficient lubricant quantity						○																				○																		Replenishment of correct lubricant	See *"Adding Engine Oil" (on page 4-17).*
Lubricant system	Excess filling into crankcase																							○			○					○													Engine oil check	See *"Adding Engine Oil" (on page 4-17).*

Symptoms and conditions of failures		Defective start					Engine stall after start			Defective rotation control						Insufficient engine output			Noise/vibration				Lubricant				Cooling water		Intake		Exhaust				Fuel			Electrics/electronics					Action	Referenced page number
		Starter not rotate		Starter rotates			Exhaust fume				Without load				At work	Exhaust color															At work													
Cause		ECU indicator lamp not on just after key-on	ECU indicator lamp on just after key-on (2 seconds)	Engine not start (not even initial combustion)	Engine not start (stall after serial combustion)	Engine starts later then ever	None	Little	Much	Speed change by accelerator not available (constant speed)	Specified speed setting not available	Poor acceleration	Return to low speed not smooth	Hunting	Hunting	Normal	White	Black	Knocking noise at combustion too high	Combustion noise uneven	Noise other than combustion from engine	Engine vibration too big	Lubricant consumption too much	Lubricant diluted with fuel	Lubricant mixed with water	Oil pressure too low (oil pressure lamp on)	Overheated (water temperature lamp on)	Water temperature too low	Pressure down (air cleaner lamp on)	Pressure up	White exhaust color	Black exhaust color	Blow-by too much	Exhaust temperature up	Fuel consumption too much	Fuel mixed with water (oil-water separator lamp on)	Fuel filter contaminated too early	Battery charge defect (charge lamp on)	ECU indicator lamp flashing	ECU indicator lamp not on just after key-on (2 seconds)	Prescribed ECU control function not operate	Fuse meltdown, disconnection (repeated)		
Fuel system	Stopper solenoid fault			○				○																																			Inspection and replacement	See *"Stop Solenoid" (on page 7-9).*
Fuel system	Fuel injection pump with injection timing excessively advanced																		○			○									○	○												Inspection and adjustment	See *"Checking and Adjusting Fuel Injection Timing" (on page 7-30).*
Fuel system	Fuel injection pump with injection timing excessively retarded																○	○													○	○		○	○									Inspection and adjustment	See *"Checking and Adjusting Fuel Injection Timing" (on page 7-30).*
Fuel system	Incorrect fuel															○	○	○		○											○	○				○	○							Usage of correct fuel	See *"Diesel Fuel Specifications" (on page 4-12).*
Fuel system	Water entered into fuel system			○	○				○					○	○		○			○											○					○								Drainage of fuel filter	See *"Drain Fuel Filter / Water Separator" (on page 5-24).*
Fuel system	Fuel filter clogged			○		○	○					○				○																											Cleaning or replacement	See *"Clean Fuel Filter / Water Separator" (on page 5-34).*
Fuel system	Air entered into fuel system			○	○		○							○	○	○																											Bleeding	See *"Priming the Fuel System" (on page 4-15).*
Fuel system	Fuel pipe clogged, cracked			○			○									○																											Cleaning or replacement	
Fuel system	Insufficient fuel feeding to fuel injection pump			○	○		○					○				○																											Check of fuel tank cock, fuel filter, fuel pipe, fuel feed pump	
Fuel system	Uneven injection quantity of fuel injection pimp													○	○		○	○		○		○									○	○		○										Inspection and adjustment	See *"Testing of Fuel Injectors" (on page 7-38).*
Fuel system	Fuel injection quatity too much																						○				○			○		○	○	○	○									Inspection and adjustment	See *"Testing of Fuel Injectors" (on page 7-38).*
Fuel system	Defective spray of fuel injection nozzle													○	○		○	○		○		○									○	○			○									Inspection and adjustment	See *"Testing of Fuel Injectors" (on page 7-38).*
Fuel system	Priming not available			○																																							Valve in priming pump pinched dust (disassembled cleaning)	See *"Fuel System Components" (on page 7-15).*
Fuel system	Strainer at feed pump inlet clogged					○						○				○																											Cleaning of strainer	
Fuel system	Operation defect of CSD valve			○		○													○																									Replacing the Pump Replacement of CSD valve	
Fuel system	Sealing defect of fuel tank																																			○	○						Check of fuel tank and cap, as well as installation of genuine parts	
Intake	Air filter clogged								○			○						○		○			○						○			○		○										Cleaning of air filter	See *"Clean Air Cleaner Element" (on page 5-31).*
Intake	Engine operation at high temperature or high land																	○									○		○			○			○									Consideration of matching output reduction with load	
Intake	Exhaust pipe clogged							○				○						○		○												○		○										Cleaning of exhaust pipe	

Symptoms and conditions of failures / Cause	Defective start					Engine stall after start			Defective rotation control							Insufficient engine output			Noise/vibration				Lubricant				Cooling water		Intake		Exhaust				Fuel			Electrics/electronics					Action	Referenced page number
	Starter not rotate		Starter rotates			Exhaust fume				Without load				At work		Exhaust color															At work													
	ECU indicator lamp not on just after key-on	ECU indicator lamp on just after key-on (2 seconds)	Engine not start (not even initial combustion)	Engine not start (stall after serial combustion)	Engine starts later then ever	None	Little	Much	Speed change by accelerator not available (constant speed)	Specified speed setting not available	Poor acceleration	Return to low speed not smooth	Hunting	Hunting		Normal	White	Black	Knocking noise at combustion too high	Combustion noise uneven	Noise other than combustion from engine	Engine vibration too big	Lubricant consumption too much	Lubricant diluted with fuel	Lubricant mixed with water	Oil pressure too low (oil pressure lamp on)	Overheated (water temperature lamp on)	Water temperature too low	Pressure down (air cleaner lamp on)	Pressure up	White exhaust color	Black exhaust color	Blow-by too much	Exhaust temperature up	Fuel consumption too much	Fuel mixed with water (oil-water separator lamp on)	Fuel filter contaminated too early	Battery charge defect (charge lamp on)	ECU indicator lamp flashing	ECU indicator lamp not on just after key-on (2 seconds)	Prescribed ECU control function not operate	Fuse meltdown, disconnection (repeated)		
Electric system																																												
Fuse meltdown, disconnection	○	○				○																																		○		○	Inspection and replacement of fuse Repair or replacement of harness	For harness inspection method, see *"Failure Diagnosis" (on page 15-1).*
Starter fault		○	○																																								Repair or replacement of starter	See *"Starter Motor" (on page 11-10).*
Alternator fault			○																																			○				Repair or replacement of alternator	See *"Removal of Alternator" (on page 12-12).*
Wiring disconnection	○	○	○			○																																○	○	○	○		Repair or replacement of harness disconnection	
Wiring short-circuit (insulator broken), electric power load of added device too big	○																																								○	Inspection, repair or replacement of harnesses Review of added devices	
Battery voltage descent		○	○																																			-					Inspection and charging of battery	See *"Check Battery" (on page 5-26).*
Key switch fault, disconnection	○					○																																		○			Repair or replacement of harness Key switch replacement	For harness inspection method, see *"Failure Diagnosis" (on page 15-1).*
Instantaneous interruption of key switch				○		○																																					Key switch replacement	
Failure, disconnection, short-circuit of starter relay		○																																									Repair or replacement of harness Replacement of starter relay	For harness inspection method, see *"Failure Diagnosis" (on page 15-1).*
Main relay fault (Error other than contact sticking that ECU can't detect)	○																																							○			Repair or replacement of harness Replacement of main relay	For harness inspection method, see *"Failure Diagnosis" (on page 15-1).*
Actuator relay fault (Error of contact that ECU can't detect)		○	○			○																																					Replacement of actuator relay	
The start assist relay may be faulty. (Error of contact that ECU can't detect)			○		○														○												○												Replacement of start assist relay	
Accelerator sensor signal error (Error at which level ECU can't detect)										○			○	○						○																							Repair or replacement of accelerator sensor	Monitor the accelerator sensor by the diagnosis tool.
Water temperature sensor signal error (Error at which level ECU can't detect)			○		○								○	○					○																								Replacement of water temperature sensor	Monitor the cooling water temperature by the diagnosis tool.
Speed sensor signal error (Cause of noise etc. that ECU can't detect)				○	○	○							○	○						○																							Cleaning or replacement of speed sensor Repair or replacement of fuel injection pump	Monitor the engine rotational speed by the diagnosis tool.
Rack position sensor signal error (Level that ECU can't detect)					○	○						○	○	○						○																							Repair or replacement of fuel injection pump	Monitor the rack position sensor signal by the diagnosis tool.
Operation defect of rack actuator (Level that ECU can't detect)					○	○						○	○	○						○																							Repair or replacement of fuel injection pump	Check the movement of rack actuator by the diagnosis tool.
ECU failure lamp disconnected																																								○			Replace the lamp. Repair or replace the harness.	
ECU faulty (ECU self diagnosis failure)	○	○								○																														○	○		Replace the ECU.	

Symptoms and conditions of failures / Cause	Defective start					Engine stall after start			Defective rotation control						Insufficient engine output			Noise/vibration				Lubricant				Cooling water		Intake		Exhaust				Fuel			Electrics/electronics					Action	Referenced page number
	Starter not rotate		Starter rotates			Exhaust fume				Without load				At work	Exhaust color															At work													
	ECU indicator lamp not on just after key-on	ECU indicator lamp on just after key-on (2 seconds)	Engine not start (not even initial combustion)	Engine not start (stall after serial combustion)	Engine starts later then ever	None	Little	Much	Speed change by accelerator not available (constant speed)	Specified speed setting not available	Poor acceleration	Return to low speed not smooth	Hunting	Hunting	Normal	White	Black	Knocking noise at combustion too high	Combustion noise uneven	Noise other than combustion from engine	Engine vibration too big	Lubricant consumption too much	Lubricant diluted with fuel	Lubricant mixed with water	Oil pressure too low (oil pressure lamp on)	Overheated (water temperature lamp on)	Water temperature too low	Pressure down (air cleaner lamp on)	Pressure up	White exhaust color	Black exhaust color	Blow-by too much	Exhaust temperature up	Fuel consumption too much	Fuel mixed with water (oil-water separator lamp on)	Fuel filter contaminated too early	Battery charge defect (charge lamp on)	ECU indicator lamp flashing	ECU indicator lamp not on just after key-on (2 seconds)	Prescribed ECU control function not operate	Fuse meltdown, disconnection (repeated)		
Engine stop or operation limits by ECU failure diagnosis function																																											
ECU control function operating		○							○	○					○																											Not failure Implement regular usage	Check the causes of engine stop or starter restraint by a diagnosis tool.
Disconnection/short-circuit of water temperature sensor										○					○																								○				Repair or replacement of harness Replacement of water temperature sensor	For harness inspection method, see *"Failure Diagnosis" (on page 15-1).*
Disconnection/short-circuit of accelerator sensor									○																														○				Repair or replacement of harness Replacement of accelerator sensor	For harness inspection method, see *"Failure Diagnosis" (on page 15-1).*
Speed sensor signal error				○		○																																	○				Repair or replacement of harness Repair or replacement of fuel injection pump	For harness inspection method, see *"Failure Diagnosis" (on page 15-1).*
Rack position sensor signal error										○			○	○	○																								○				Repair or replacement of harness Repair or replacement of fuel injection pump	For harness inspection method, see *"Failure Diagnosis" (on page 15-1).*
Operation defect of rack actuator		○				○																																	○				Repair or replacement of harness Repair or replacement of fuel injection pump	For harness inspection method, see *"Failure Diagnosis" (on page 15-1).*
Engine over speed						○																																	○				Check operating machine's driving. Check speed sensor signal.	
CAN communication error									○																														○		○		Repair or replacement of harness ECU Replacement	For harness inspection method, see *"Failure Diagnosis" (on page 15-1).*
Disconnection/short-circuit of EGR valve motor										○					○																								○				Repair or replacement of harness Replacement of EGR valve	For harness inspection method, see *"Failure Diagnosis" (on page 15-1).*
Disconnection/short-circuit of CSD solenoid valve			○		○																																		○				Repair or replacement of harness Replacement of CSD valve solenoid	For harness inspection method, see *"Failure Diagnosis" (on page 15-1).*
Disconnection/short-circuit of start assist relay			○		○																									○									○				Repair or replacement of harness Relay replacement	For harness inspection method, see *"Failure Diagnosis" (on page 15-1).*
Main relay "OFF" not available																																						○	○				Relay replacement	
Disconnection/short-circuit of rack actuator relay		○																																					○				Repair or replacement of harness Relay replacement	For harness inspection method, see *"Failure Diagnosis" (on page 15-1).*
Malfunction by ECU self-diagnosis		○																																					○				ECU Replacement	

This Page Intentionally Left Blank

ELECTRICAL WIRING

Note: The following wiring diagram is “representative” of a common installation using a Yanmar engine. The actual installation may be equipped with a variety of electrical components and wiring harnesses. Contact the machine manufacturer for specific information.

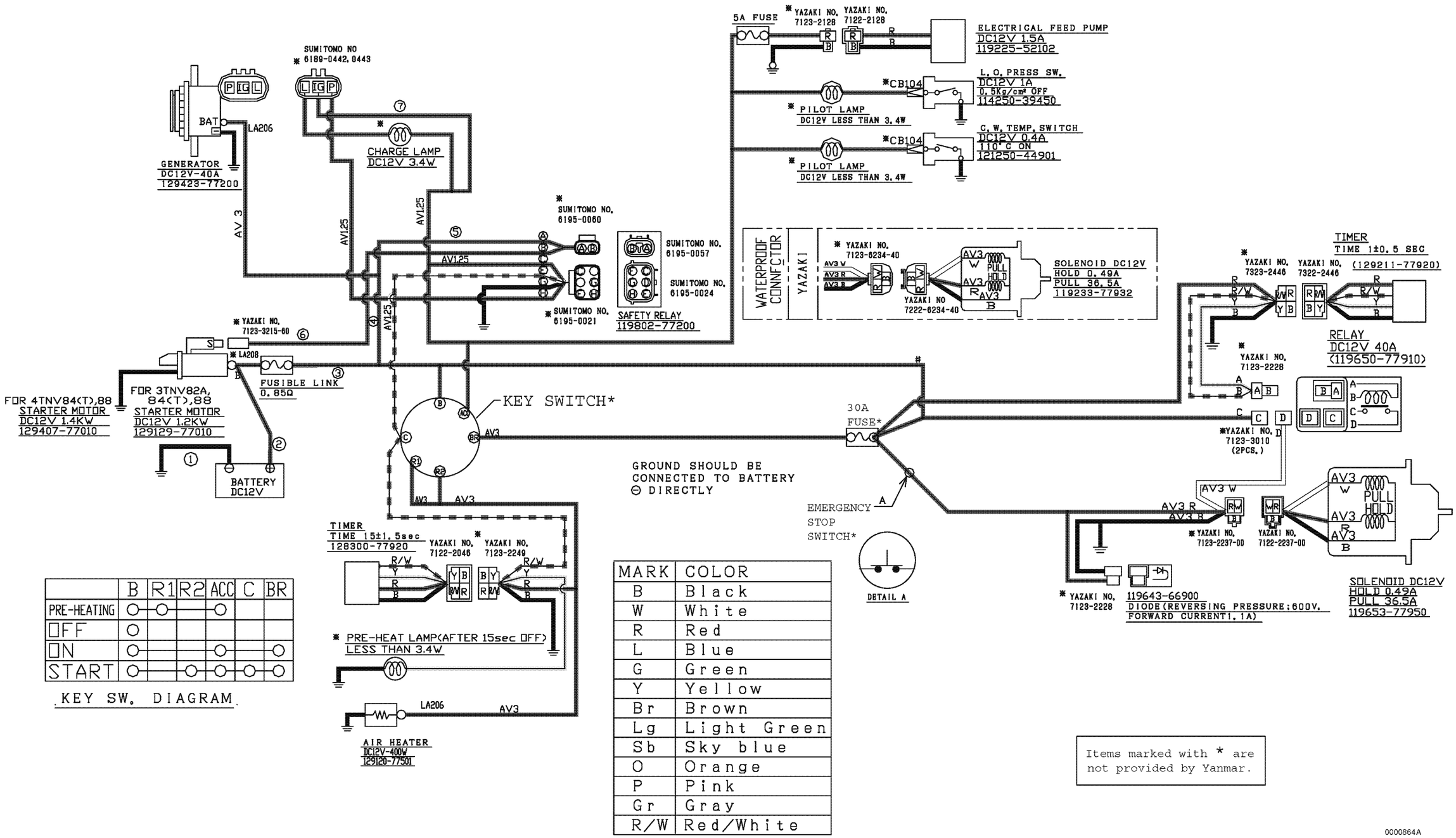

	B	R1	R2	ACC	C	BR
PRE-HEATING	○	○		○		
OFF	○					
ON	○			○		○
START	○		○	○	○	○

KEY SW. DIAGRAM

MARK	COLOR
B	Black
W	White
R	Red
L	Blue
G	Green
Y	Yellow
Br	Brown
Lg	Light Green
Sb	Sky blue
O	Orange
P	Pink
Gr	Gray
R/W	Red/White

This Page Intentionally Left Blank

YANMAR®

Head Office:
Yanmar Co., Ltd.
1-32 Chayamachi, Kita-ku, Osaka Japan
http://www.yanmar.co.jp

Yanmar America Corporation
951 Corporate Grove Drive
Buffalo Grove, IL 60089-4508, U.S.A.
TEL: 1-847-541-1900 FAX: 1-847-541-2161
http://www.yanmar.com

Yanmar Europe B.V.
Brugplein11, 1332 BS Almere -de Vaart,
The Netherlands.
TEL: 31-36-5493200 FAX: 31-36-5493209
http://www.yanmar.nl

Yanmar Asia (Singapore) Corporation Pte. Ltd.
4 Tuas Lane, Singapore 638613
TEL: 65-68615077 FAX: 65-68611509
http://www.yanmar.co.jp/yasc/

YANMAR.

YANMAR CO.,LTD.

0BTNV-G00102
PRINTED IN JAPAN