GROUP 3 AUTOMATIC DECELERATION SYSTEM

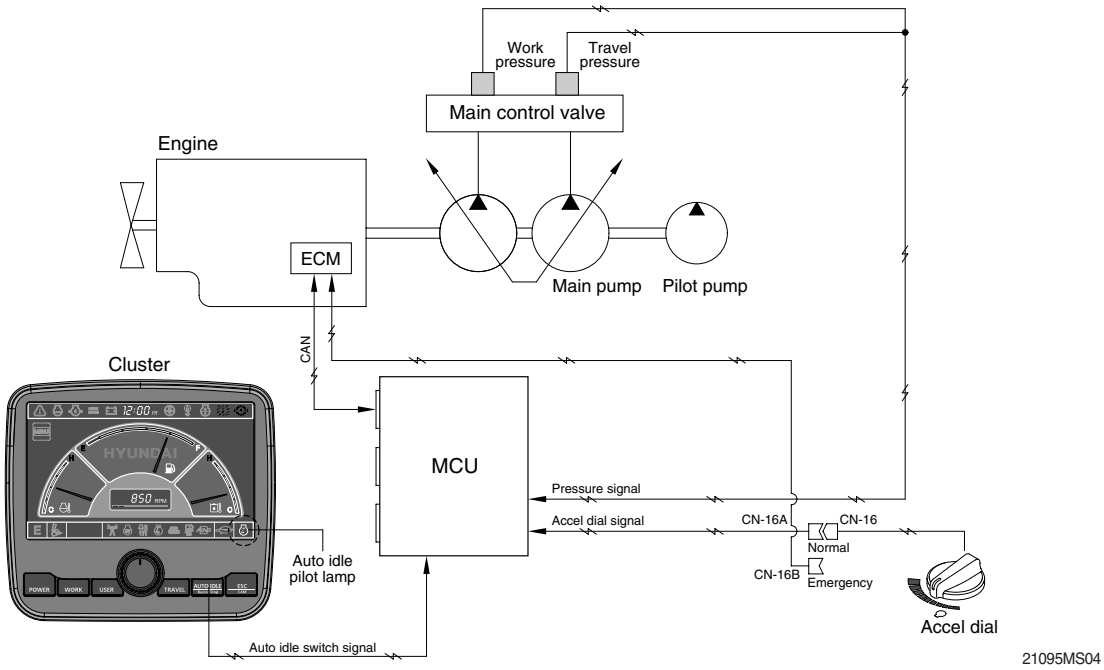

1. WHEN AUTO IDLE PILOT LAMP ON

When all of the work equipment control levers including swing and travel levers are at neutral for 4 seconds, MCU sends throttle command to ECM to reduce the engine speed to 1000 rpm. If the control levers are at neutral for 1 minute, MCU reduces the engine speed to 950 rpm. As the result of reducing the engine speed, fuel consumption and noise are effectively cut down during non-operation of the control levers.

When the Auto idle pilot lamp is turned off by pressing the switch or any control lever is operated, the reduced engine speed rises upto the speed before deceleration in a second.

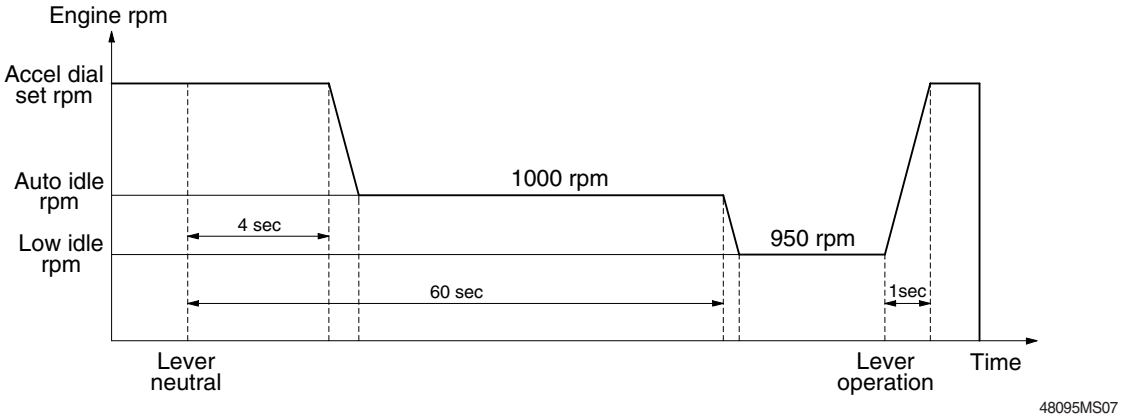

2. WHEN AUTO IDLE PILOT LAMP OFF

The engine speed can be set as desired using the accel dial switch, and even if the control levers are neutral, the engine speed is not reduced.

※ Auto idle function can be activated when accel dial position is over 4.