# GROUP 15 FUEL WARMER SYSTEM

## 1. SPECIFICATION

1) Operating voltage : 24±4 V
2) Power : 350±50 W
3) Current : 15 A

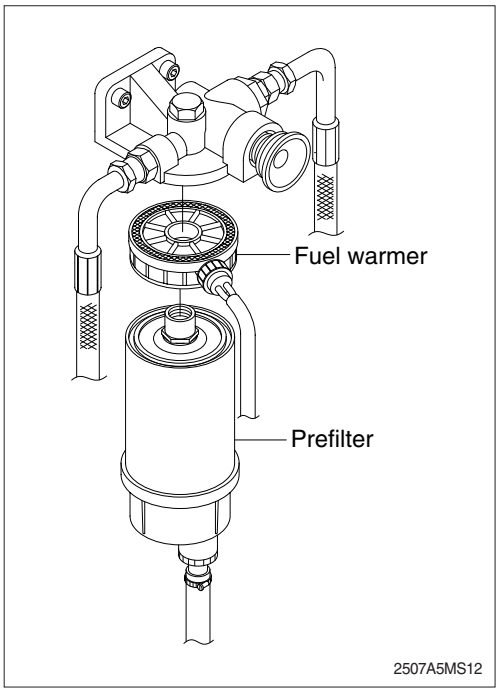


## 2. OPERATION

1) The current of fuel warmer system is automatically controlled without thermostat according to fuel temperature.
2) At the first state, the 15 A current flows to the fuel warmer and engine may be started in 1~2 minutes.
3) If the fuel starts to flow, ceramic-disk in the fuel warmer heater senses the fuel temperature to reduce the current as low as 1.5 A.
   So, fuel is protected from overheating by this mechanism.
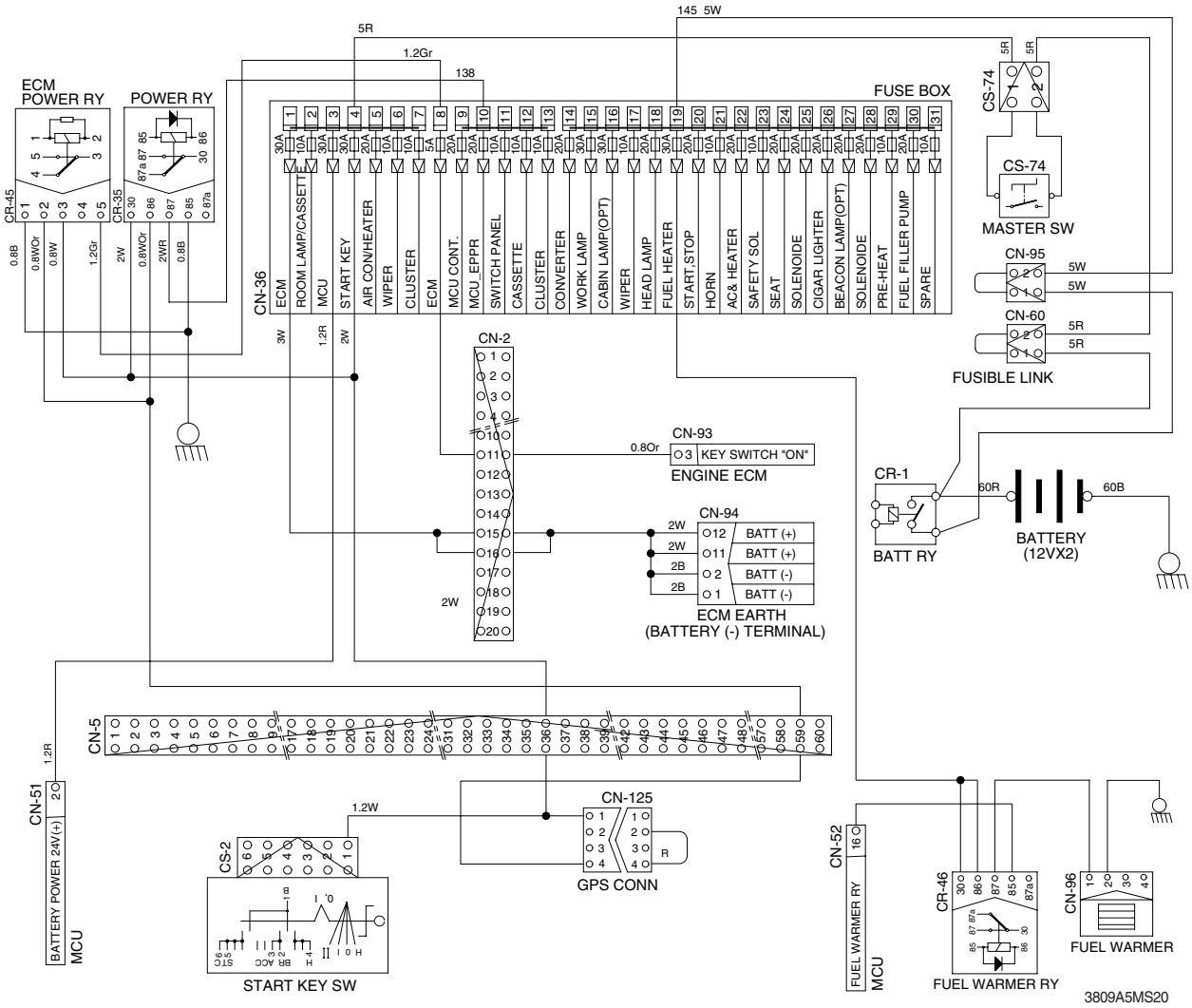
## 3. ELECTRIC CIRCUIT