GROUP 3 FUEL WARMER SYSTEM

1. SPECIFICATION

1) Operating voltage : 24±4V
2) Power : 350±50W
3) Current : 15A

2. OPERATION

1) The current of fuel warmer system is automatically controlled without thermostat according to fuel temperature.
2) At the first state, the 15A current flows to the fuel warmer and engine may be started in 1~2 minutes.
3) If the fuel starts to flow, ceramic-disk in the fuel warmer heater senses the fuel temperature to reduce the current as low as 1.5A.
   So, fuel is protected from overheating by this mechanism.

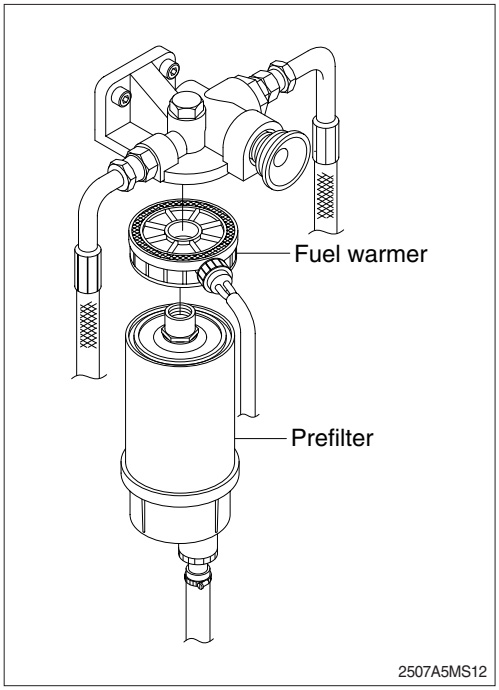
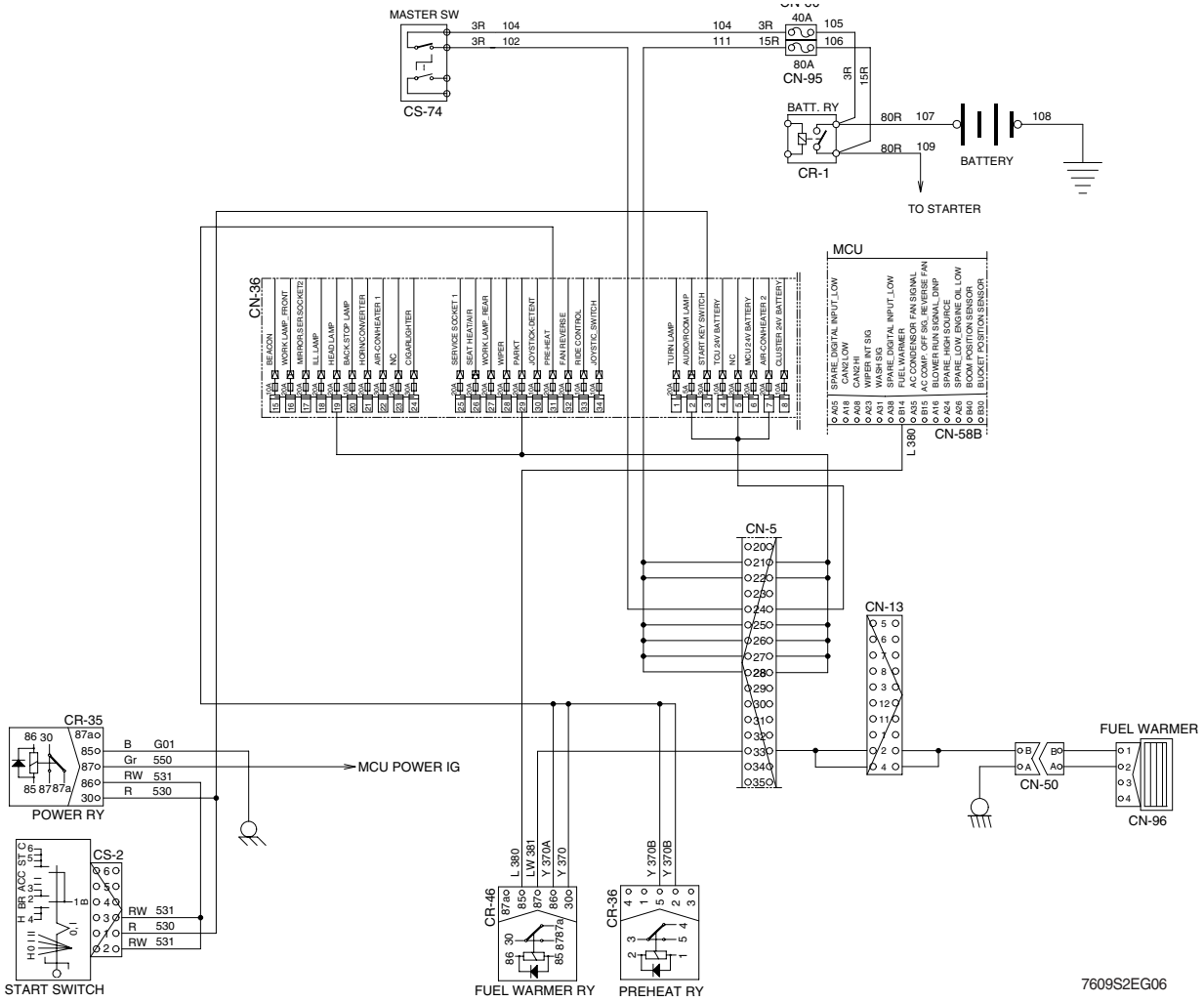
3. ELECTRIC CIRCUIT